FENAC
Automation Control

www.fenac.com.tr

- ENCODERS
- SENSORS
- MOTORFEEDBACK

Motion Control Products 2019

Welcome
to the world of quality encoders

FENAC Automation Control

The company Fenac was founded in 2002 with 20 years industry and production experience in the industrial automation market. Fenac Engineering defined and positoned itself as a global producer of motion control and feedback devices. For that purpose company enlarge the product range day by day according to customer and market requirements.

Fenac's initial aim is to produce high quality, leading-edge and competitive motion control products for different tasks and applications like all kind of industrial machines, iron-steel motors, different model and type elevator motors, machine tools, weighscales, conveyors, printing machines, drives, textile machines, production lines, injection - moulding machines, test machines, elevators/lifts, door and gates.

As a result of aiming high quality motion control products, Fenac has the following products in the product range;

- Optical Incremental Encoders
- Optical Absolute Encoders
- Magnetic Incremental Encoders
- Magnetic Absolute Encoders
- Draw Wire Units - Wire Actuated Encoders
- Magnetic Linear Encoders
- Encoder With Analog Outputs

Motion Control Products

Table of contents

Applications and Solutions

Packaging Machines

Position Measurement in Bottle Inspection

Position Measurement for Industrial Cranes

Lift Applications

Paper and Pulp Industry

Wind Turbine Applications

Incremental encoders

- **Robust**
- **Reliable**

Motion Control Products

FNC 30S Series

Features

- **Industry 30 mm special size, servo flange and clamp flange**
- **Robust mechanical and electrical construction**
- **Protection up to IP67**
- **Up to 2500 PPR max.**
- **<300 kHz frequency**

PPR Options :

1 to- 1024 all PPR, - 360 - 500 - 512 - 720 - 1000 - 1024
1250 - 1440 - 2000 - 2048 -2500

Technical data - electrical ratings

Voltage supply	4.75VDC to 30VDC 4.75VDC to 5.5VDC
Protection:	Output short circuit protection. Reverse polarity protection (except 5V version)
Consumption w/o load	≤30 mA (24 VDC)
Resolution (steps/turn)	1...2500
Reference signal	Zero pulse, width 90° 180°, 360° optional
Optoelectronic life time	100.000 (min)
Output frequency	>200 kHz
Output signals	90° shifted A and B, Z + inverted
Output circuit	Linedriver/RS422 Push-pull short-circuit proof NPN Open Collector
Interference immunity	DIN EN 61000-6-2
Emitted interference	DIN EN 61000-6-4
Approval	CE

Technical data - mechanical design

Dimensions (flange)	ø30 mm
Shaft loading	≤20 N axial ≤30 N radial
Protection DIN EN 60529	IP54, IP65
Operating speed	≤10000 rpm
Starting torque	≤0.01 Nm (IP 67)
Materials	Housing: stainless steel Flange: stainless steel Shaft : stainless steel
Shaft Diameter:	4, 6, 8 mm (other diameters on request)
Bearings lifetime:	$2x10^9$ rev. at 100% of full rated shaft load (minimum)
Operating temperature	-20...+85 °C
Storage temperature	-30 °C up to +90 °C
Weight approx.	130 g

Accessories

Connectors and cables
CRM1204 M12 4 poles female connector or see page 160

Mounting coupling
SK240606 plastic or see page 158

Mounting accessories
YY RST Spring or see page 156-157

FNC 30S Series

Mechanical Dimensions

FNC 30S

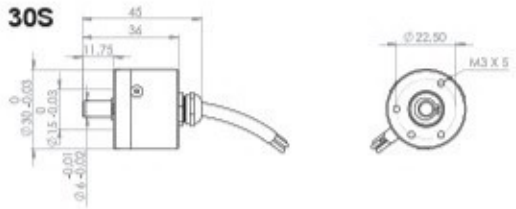

FNC 30B

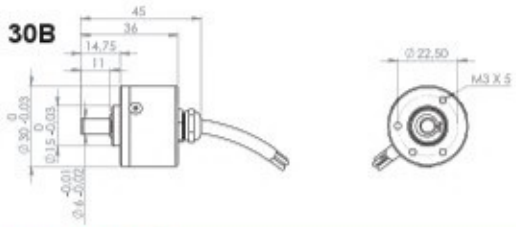

Pulse Diagram

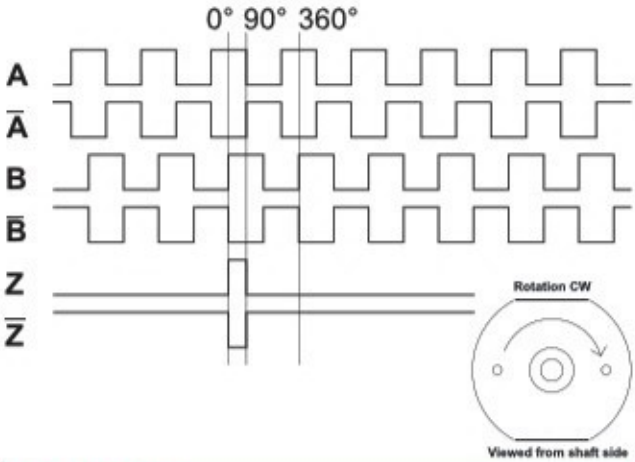

Connector Wiring

Connector Type	+Vcc	GND	A	A'	B	B'	Z	Z'	Shield
CRM1204	1	2	3		4				o.r.
CRM1205	1	2	3		4		5		o.r.
CRM1208	1	2	3	6	4	7	5	8	o.r.
CRM1212	1	2	3	6	4	7	5	8	o.r.
CRM1607	1	2	3		4		5		o.r.
CRM1614	Customer Specific								o.r.

For further information please see page 64

Cable Wiring

Function	Color	Renk	Explanation
+VB	Brown	Kahve	Supply Voltage
GND	White	Beyaz	Ground
A	Green	Yeşil	A Channel
A'	Red	Kırmızı	A Inverted Channel
B	Yellow	Sarı	B Channel
B'	Pink	Pembe	B Inverted Channel
Z	Gray	Gri	Z Channel
Z'	Blue	Mavi	Z Inverted Channel
Shield	Black	Siyah	Shield

Encoder Part Number

FNC | 30 | S | 6 | 6 | 30V | 1000 | – | R2

Housing:
30 : 30mm

Flange Type:
S : Servo flange **B :** Clamping flange

Shaft diameter : 4, 6, 8
Other dimensions on request

Output Channels
1 : A
2 : AB
3 : ABZ
4 : AB+A' B'
6 : ABZ+A' B' Z'

Electrical Connections:

Cable
A2 : axial 2m, Total length 25 mm
R2 : radial Total length 35 mm

Connector:
CAM1204 CAM1607
CAM1205 CAM1614

PPR Options :
1 to- 1024 all PPR, - 360 - 500 - 512 - 720 - 1000 - 1024 - 1440 - 2000 - 2048 - 2500

Supply Voltage and output circuit :
5V : 5V in / out
245V : 5-30V in 5V out
30V : 5-30V in / out

Incremental encoders

Resolution 1...4096 pulses

FNC 40B Series

Features

- **Industry 40 mm size, 20mm diameter clamping flange**
- **Universal 40 mm encoders**
- **Robust Mechanical and Electrical Construction**
- **Protection up to IP67**
- **Up to 4096 PPR max.**
- **<300 kHz frequency**

PPR Options :

1 to 1024 - 2048 - 4096

Technical data - electrical ratings

Voltage supply	4.75VDC to 30VDC 4.75VDC to 5.5VDC
Protection:	Output short circuit protection. Reverse polarity protection (except 5V version)
Consumption w/o load	≤60 mA (24 VDC)
Resolution (steps/turn)	1 to 1024 - 2048 - 4096
Reference signal	Zero pulse, width 90° 180°, 360° optional
Optoelectronic life time	100.000 (min)
Output frequency	>200 kHz
Output signals	90° shifted A and B, Z + inverted
Output circuit	Linedriver/RS422 Push-pull short-circuit proof NPN Open Collector
Interference immunity	DIN EN 61000-6-2
Emitted interference	DIN EN 61000-6-4
Approval	CE

Technical data - mechanical design

Dimensions (flange)	ø40 mm
Shaft loading	≤60 N axial ≤80 N radial
Protection DIN EN 60529	IP54, IP65
Operating speed	≤10000 rpm
Starting torque	≤0.020 Nm (IP 67)
Materials	Housing: Aluminium Flange: Aluminium Shaft : Stainless steel
Shaft diameter:	4, 5, 6, 8 mm (other diameters on request)
Bearings lifetime:	$2x10^9$ rev. at 100% of full rated shaft load (minimum)
Operating temperature	-20...+85 °C
Storage temperature	-30 °C up to +90 °C
Weight approx.	80 g

Accessories

Connectors and cables
CRM1204 M12 4 poles female connector or see page 160

Mounting coupling
SK240606 plastic or see page 158

Mounting accessories
YY RST Spring or see page 156-157

FNC 40B Series

Mechanical Dimensions

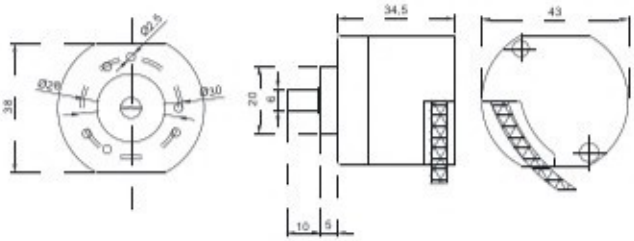

Pulse Diagram

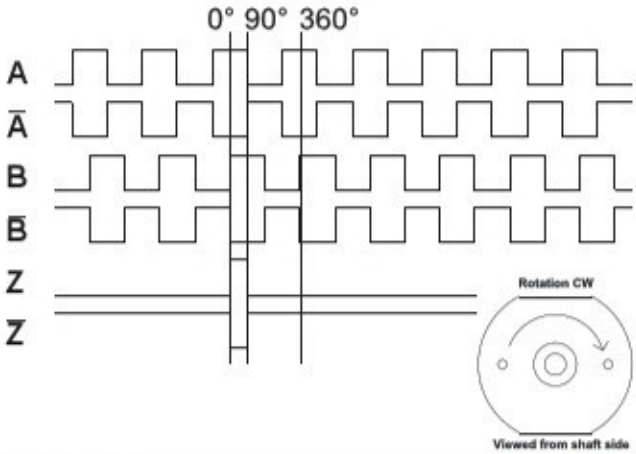

Connector Wiring

Connector Type	+Vcc	GND	A	A'	B	B'	Z	Z'	Shield
CRM1204	1	2	3		4				o.r.
CRM1205	1	2	3		4		5		o.r.
CRM1208	1	2	3	6	4	7	5	8	o.r.
CRM1212	1	2	3	6	4	7	5	8	o.r.
CRM1607	1	2	3		4		5		o.r.
CRM1614	Customer Specific								o.r.

For further information please see page 112

Cable Wiring

Function	Color	Renk	Explanation
+VB	Brown	Kahve	Supply Voltage
GND	White	Beyaz	Ground
A	Green	Yeşil	A Channel
A'	Red	Kırmızı	A Inverted Channel
B	Yellow	Sarı	B Channel
B'	Pink	Pembe	B Inverted Channel
Z	Gray	Gri	Z Channel
Z'	Blue	Mavi	Z Inverted Channel
Shield	Black	Siyah	Shield

Encoder Part Number

FNC | 40 | B | 6 | 6 | 30V | 1024 | – | R2

Housing:
40 : 40mm

Flange Type:
B : Clamping flange

Shaft diameter : 4, 5, 6, 8
Other dimensions on request

Output Channels
1 : A
2 : AB
3 : ABZ
4 : AB+A' B'
6 : ABZ+A' B' Z'

Electrical Connections:

Cable
R2 : radial 2m, shield not connected (standart)
A2 : axial 2m, shield not connected (standart)

Connector:
CRM1204 CRM1212
CRM1205 CRM1607
CRM1208 CRM1614

PPR Options :
1 to 1024 - 2048 - 4096

Supply Voltage and output circuit :
5V : 5Vin / out
245V : 5-30Vin 5Vout
30V : 5-30Vin / out

FNC 40V Series

Features

- **Industry 40 mm size, screw flange**
- **Universal 40 mm encoders**
- **Robust Mechanical and Electrical Construction**
- **Protection up to IP67**
- **Up to 2048 PPR max.**
- **<300 kHz frequency**

PPR Options :

1 to 128 - 25 - 50 - 100 - 200 - 360 - 500 - 512 - 1000 - 1024 - 2000 - 2048

Technical data - electrical ratings

Voltage supply	4.75VDC to 30VDC 4.75VDC to 5.5VDC
Protection:	Output short circuit protection. Reverse polarity protection (except 5V version)
Consumption w/o load	≤60 mA (24 VDC)
Resolution (steps/turn)	1...2048
Reference signal	Zero pulse, width 90° 180°, 360° optional
Optoelectronic life time	100.000 (min)
Output frequency	>200 kHz
Output signals	90° shifted A and B, Z + inverted
Output circuit	Linedriver/RS422 Push-pull short-circuit proof NPN Open Collector
Interference immunity	DIN EN 61000-6-2
Emitted interference	DIN EN 61000-6-4
Approval	CE

Technical data - mechanical design

Dimensions (flange)	ø40 mm
Shaft loading	≤60 N axial ≤80 N radial
Protection DIN EN 60529	IP54, IP65
Operating speed	≤10000 rpm
Starting torque	≤0.020 Nm (IP 67)
Materials	Housing: Aluminium Flange: Aluminium Shaft : Stainless steel
Shaft diameter:	4, 5, 6, 8 mm (other diameters on request)
Bearings lifetime:	$2x10^9$ rev. at 100% of full rated shaft load (minimum)
Operating temperature	-20...+85 °C
Storage temperature	-30 °C up to +90 °C
Weight approx.	150 g

Accessories

Connectors and cables
CRM1204 M12 4 poles female connector or see page 160

Mounting coupling
SK240606 plastic or see page 158

Mounting accessories
YY RST Spring or see page 156-157

FNC 40V Series

Mechanical Dimensions

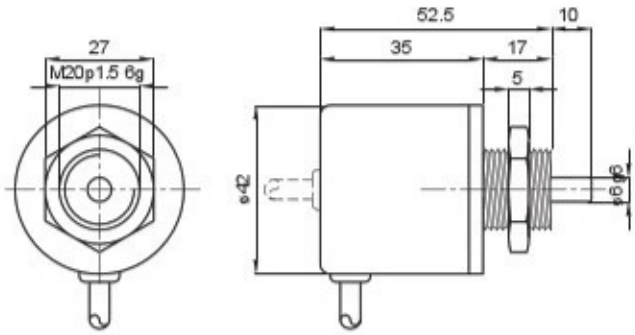

Pulse Diagram

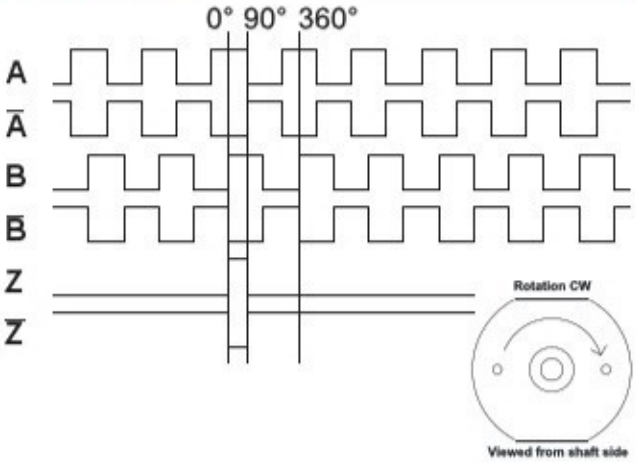

Connector Wiring

Connector Type	+Vcc	GND	A	A'	B	B'	Z	Z'	Shield
CRM1204	1	2	3		4				o.r.
CRM1205	1	2	3		4		5		o.r.
CRM1208	1	2	3	6	4	7	5	8	o.r.
CRM1212	1	2	3	6	4	7	5	8	o.r.
CRM1607	1	2	3		4		5		o.r.
CRM1614	Customer Specific								o.r.

For further information please see page 112

Cable Wiring

Function	Color	Renk	Explanation
+VB	Brown	Kahve	Supply Voltage
GND	White	Beyaz	Ground
A	Green	Yeşil	A Channel
A'	Red	Kırmızı	A Inverted Channel
B	Yellow	Sarı	B Channel
B'	Pink	Pembe	B Inverted Channel
Z	Gray	Gri	Z Channel
Z'	Blue	Mavi	Z Inverted Channel
Shield	Black	Siyah	Shield

Encoder Part Number

FNC | 40 | V | 6 | 6 | 30V | 1024 | – | R2

Housing:
40 : 40mm

Flange Type:
V1 : M20 Screw flange
V2 : M24 Screw flange

Shaft diameter : 4, 5, 6, 8
Other dimensions on request

Output Channels
1 : A
2 : AB
3 : ABZ
4 : AB+A' B'
6 : ABZ+A' B' Z'

Electrical Connections:

Cable
R2 : radial 2m, shield not connected (standart)
A2 : axial 2m, shield not connected (standart)

Connector:
CRM1204 CRM1212
CRM1205 CRM1607
CRM1208 CRM1614

PPR Options :
1 to 128 - 25 - 50 - 100 - 200 - 360 - 500 - 512 - 1000 - 1024 - 2000 - 2048

Supply Voltage and output circuit :
5V : 5Vin / out
245V : 5-30Vin 5Vout
30V : 5-30Vin / out

FNC 50S Series

Features

- **Industry 50 mm standard size, servo flange**
- **Robust mechanical and electrical construction**
- **Protection up to IP67**
- **Up to 5000 PPR max.**
- **<300 kHz frequency**

PPR Options :

1 to 128 - 25 - 50 - 100 - 200 - 250 - 300 - 360 - 400 - 500 - 512 - 600 - 720 - 800 - 900 - 1000 - 1024 - 1250 - 1440 - 2000 - 2048 - 2500 - 3000 - 3600 - 4000 - 5000

Technical data - electrical ratings

Voltage supply	4.75VDC to 30VDC 4.75VDC to 5.5VDC
Protection:	Output short circuit protection. Reverse polarity protection (except 5V version)
Consumption w/o load	≤60 mA (24 VDC)
Resolution (steps/turn)	1...5000
Reference signal	Zero pulse, width 90° 180°, 360° optional
Optoelectronic life time	100.000 (min)
Output frequency	>200 kHz
Output signals	90° shifted A and B, Z + inverted
Output circuit	Linedriver/RS422 Push-pull short-circuit proof NPN Open Collector
Interference immunity	DIN EN 61000-6-2
Emitted interference	DIN EN 61000-6-4
Approval	CE

Technical data - mechanical design

Dimensions (flange)	ø50 mm
Shaft loading	≤60 N axial ≤80 N radial
Protection DIN EN 60529	IP54, IP65
Operating speed	≤10000 rpm
Starting torque	≤0.025 Nm (IP 67)
Materials	Housing: Aluminium Flange: Aluminium Shaft : Stainless steel
Shaft diameter:	6, 8, 10 mm (other diameters on request)
Bearings lifetime:	$2x10^9$ rev. at 100% of full rated shaft load (minimum)
Operating temperature	-20...+85 °C
Storage temperature	-30 °C up to +90 °C
Weight approx.	150 g

Accessories

Connectors and cables
CRM1204 M12 4 poles female connector or see page 160

Mounting coupling
SK240606 plastic or see page 158

Mounting accessories
YY RST Spring or see page 156-157

FNC 50S Series

Mechanical Dimensions

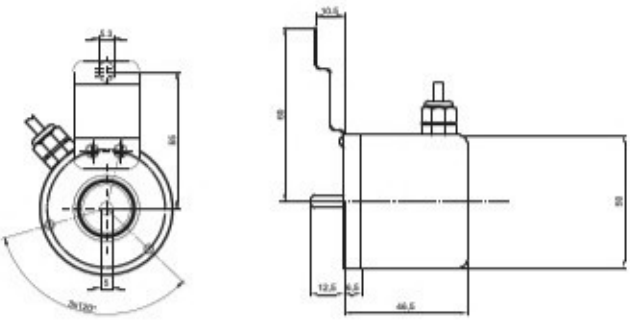

Pulse Diagram

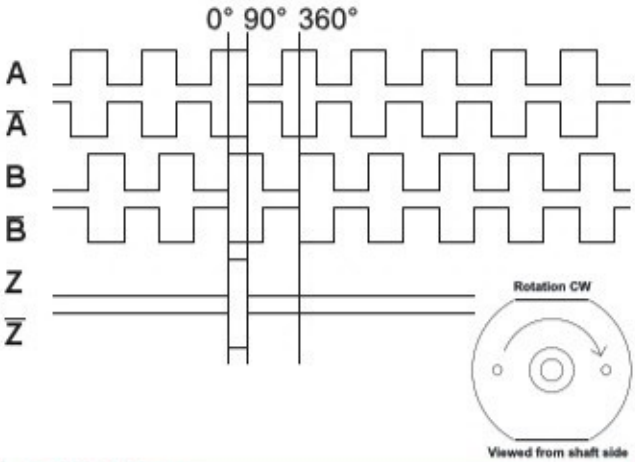

Connector Wiring

Connector Type	+Vcc	GND	A	A'	B	B'	Z	Z'	Shield
CRM1204	1	2	3		4				o.r.
CRM1205	1	2	3		4		5		o.r.
CRM1208	1	2	3	6	4	7	5	8	o.r.
CRM1212	1	2	3	6	4	7	5	8	o.r.
CRM1607	1	2	3		4		5		o.r.
CRM1614	Customer Specific								o.r.
CRM2312R	2-12	10-11	5	6	8	1	3	4	o.r.
CRM2312L	2-12	10-11	5	6	8	1	3	4	o.r.

For further information please see page 112

Cable Wiring

Function	Color	Renk	Explanation
+VB	Brown	Kahve	Supply Voltage
GND	White	Beyaz	Ground
A	Green	Yeşil	A Channel
A'	Red	Kırmızı	A Inverted Channel
B	Yellow	Sarı	B Channel
B'	Pink	Pembe	B Inverted Channel
Z	Gray	Gri	Z Channel
Z'	Blue	Mavi	Z Inverted Channel
Shield	Black	Siyah	Shield

Encoder Part Number

FNC | 50 | S | 10 | 6 | 30V | 1024 | – | R2

Housing:
50 : 50mm

Flange Type:
S : Servo flange
B : Clamping flange

Shaft diameter : 4, 6, 8, 10
Other dimensions on request

Output Channels
1 : A
2 : AB
3 : ABZ
4 : AB+A' B'
6 : ABZ+A' B' Z'

Electrical Connections:

Cable
R2 : radial 2m, shield not connected (standart)
A2 : axial 2m, shield not connected (standart)

Connector:

CRM1204	CRM1607
CRM1205	CRM1614
CRM1208	CRM2312R
CRM1212	CRM2312L

PPR Options :

1 to 128 - 25 - 50 - 100 - 200 - 250 - 300 - 360 - 400 - 500 - 512 - 600 - 720 - 800 - 900 - 1000 - 1024 - 1250 - 2000 - 2048 - 2500 - 3000 - 3600 - 4000 - 5000

Supply Voltage and output circuit :

5V : 5Vin / out
245V : 5-30Vin 5Vout
30V : 5-30Vin / out

FNC 50B Series

Features

- **Industry 50 mm Standard Size, Clamping Flange**
- **Robust Mechanical and Electrical Construction**
- **Protection up to IP67**
- **Up to 5000 PPR max.**
- **<300 kHz frequency**

PPR Options :

1 to 128 - 25 - 50 - 100 - 200 - 250 - 300 - 360 - 400 - 500 - 512 - 600 - 720 - 800 - 900 - 1000 - 1024 - 1250 - 1440 - 2000 - 2048 - 2500 - 3000 - 3600 - 4000 - 5000

Technical data - electrical ratings

Voltage supply	4.75VDC to 30VDC 4.75VDC to 5.5VDC
Protection:	Output short circuit protection. Reverse polarity protection (except 5V version)
Consumption w/o load	≤60 mA (24 VDC)
Resolution (steps/turn)	1...5000
Reference signal	Zero pulse, width 90° 180°, 360° optional
Optoelectronic life time	100.000 (min)
Output frequency	>200 kHz
Output signals	90° shifted A and B, Z + inverted
Output circuit	Linedriver/RS422 Push-pull short-circuit proof NPN Open Collector
Interference immunity	DIN EN 61000-6-2
Emitted interference	DIN EN 61000-6-4
Approval	CE

Technical data - mechanical design

Dimensions (flange)	ø50 mm
Shaft loading	≤60 N axial ≤80 N radial
Protection DIN EN 60529	IP54, IP65
Operating speed	≤10000 rpm
Starting torque	≤0.025 Nm (IP 67)
Materials	Housing: Aluminium Flange: Aluminium Shaft : Stainless steel
Shaft diameter:	6, 8, 10 mm (other diameters on request)
Bearings lifetime:	$2x10^9$ rev. at 100% of full rated shaft load (minimum)
Operating temperature	-20...+85 °C
Storage temperature	-30 °C up to +90 °C
Weight approx.	150 g

Accessories

Connectors and cables
CRM1204 M12 4 poles female connector or see page 160

Mounting coupling
SK240606 plastic or see page 158

Mounting accessories
YY RST Spring or see page 156-157

FNC 50B Series

Mechanical Dimensions

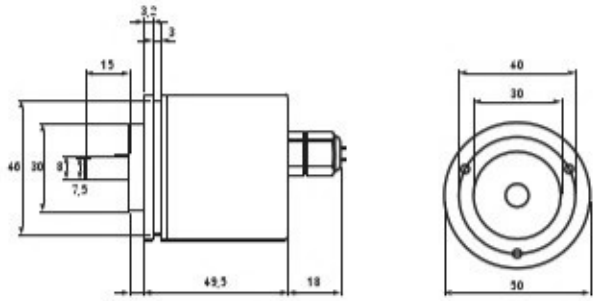

Pulse Diagram

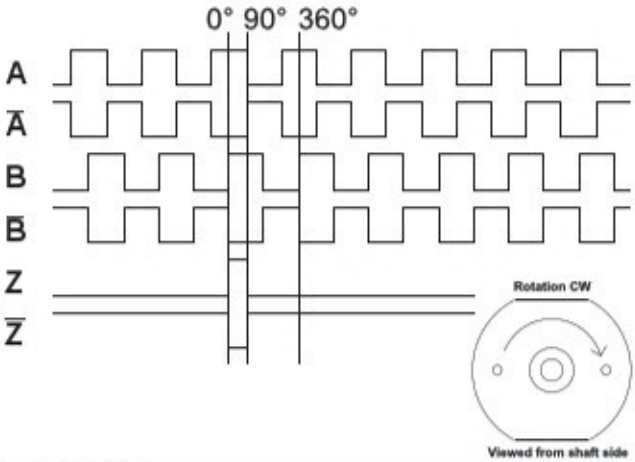

Connector Wiring

Connector Type	+Vcc	GND	A	A'	B	B'	Z	Z'	Shield
CRM1204	1	2	3		4				o.r.
CRM1205	1	2	3		4		5		o.r.
CRM1208	1	2	3	6	4	7	5	8	o.r.
CRM1212	1	2	3	6	4	7	5	8	o.r.
CRM1607	1	2	3		4		5		o.r.
CRM1614	Customer Specific								o.r.
CRM2312R	2-12	10-11	5	6	8	1	3	4	o.r.
CRM2312L	2-12	10-11	5	6	8	1	3	4	o.r.

For further information please see page 112

Cable Wiring

Function	Color	Renk	Explanation
+VB	Brown	Kahve	Supply Voltage
GND	White	Beyaz	Ground
A	Green	Yeşil	A Channel
A'	Red	Kırmızı	A Inverted Channel
B	Yellow	Sarı	B Channel
B'	Pink	Pembe	B Inverted Channel
Z	Gray	Gri	Z Channel
Z'	Blue	Mavi	Z Inverted Channel
Shield	Black	Siyah	Shield

Encoder Part Number

FNC | 50 | B | 10 | 6 | 30V | 1024 | – | R2

Housing:
50 : 50mm

Flange Type:
S : Servo flange
B : Clamping flange

Shaft diameter : 4, 6, 8, 10
Other dimensions on request

Output Channels
1 : A
2 : AB
3 : ABZ
4 : AB+A' B'
6 : ABZ+A' B' Z'

Electrical Connections:

Cable
R2 : radial 2m, shield not connected (standart)
A2 : axial 2m, shield not connected (standart)

Connector:

CRM1204	CRM1607
CRM1205	CRM1614
CRM1208	CRM2312R
CRM1212	CRM2312L

PPR Options :

1 to 128 - 25 - 50 - 100 - 200 - 250 - 300 - 360 - 400 - 500 - 512 - 600 - 720 - 800 - 900 - 1000 - 1024 - 1250 - 2000 - 2048 - 2500 - 3000 - 3600 - 4000 - 5000

Supply Voltage and output circuit :

5V : 5Vin / out
245V : 5-30Vin 5Vout
30V : 5-30Vin / out

FNC 50HB Series conic shaft encoders

Features

- **Industry 50 mm standart size, tapered shaft**
- **Robust Mechanical and Electrical Construction**
- **Protection up to IP67**
- **Up to 65.536 PPR max.**
- **<300 kHz frequency**

PPR Options :

1024 - 2048 - 4096 - 5000 - 8192 - 10.000 standard PPRs
1 to 65.536 optional

Technical data - electrical ratings

Voltage supply	4.75VDC to 30VDC 4.75VDC to 5.5VDC
Protection:	Output short circuit protection. Reverse polarity protection (except 5V version)
Consumption w/o load	≤60 mA (24 VDC)
Resolution (steps/turn)	1...5000
Reference signal	Zero pulse, width 90° 180°, 360° optional
Optoelectronic life time	100.000 (min)
Output frequency	<300 kHz
Output signals	90° shifted A and B, Z + inverted
Output circuit	Linedriver/RS422 Push-pull short-circuit proof NPN Open Collector
Interference immunity	DIN EN 61000-6-2
Emitted interference	DIN EN 61000-6-4
Approval	CE

Technical data - mechanical design

Dimensions (flange)	ø50 mm
Shaft loading	≤80 N axial ≤100 N radial
Protection DIN EN 60529	IP54, IP65
Operating speed	≤10000 rpm
Starting torque	≤0.025 Nm (IP 67)
Materials	Housing: Aluminium Flange: Aluminium Shaft : Stainless steel
Shaft diameter:	1/10 conic shaft
Bearings lifetime:	$2x10^9$ rev. at 100% of full rated shaft load (minimum)
Operating temperature	-20...+85 °C
Storage temperature	-30 °C up to +90 °C
Weight approx.	150 g

Accessories

Connectors and cables
See page 160

Mounting coupling
See page 158

Mounting accessories
YY AKR Spring or see page 156-157

FNC 50HB Series conic shaft encoders

Mechanical Dimensions

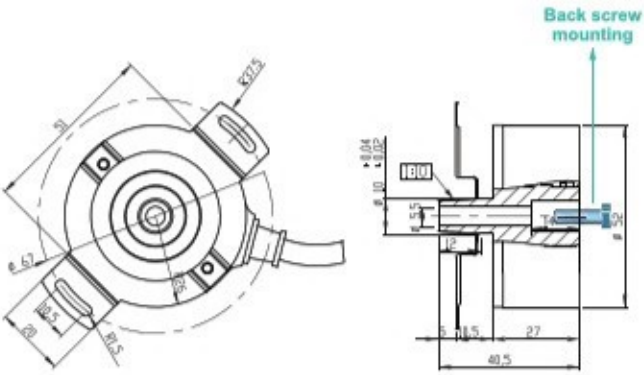

Pulse Diagram

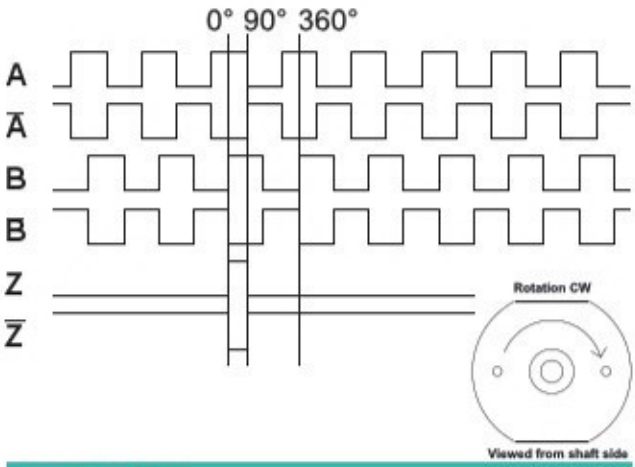

Connector Wiring

Connector Type	+Vcc	GND	A	A'	B	B'	Z	Z'	Shield
CRM1204	1	2	3		4				o.r.
CRM1205	1	2	3		4		5		o.r.
CRM1208	1	2	3	6	4	7	5	8	o.r.
CRM1212	1	2	3	6	4	7	5	8	o.r.
CRM1607	1	2	3		4		5		o.r.
CRM1614	Customer Specific								o.r.

For further information please see page 112

Cable Wiring

Function	Color	Renk	Explanation
+VB	Brown	Kahve	Supply Voltage
GND	White	Beyaz	Ground
A	Green	Yeşil	A Channel
A'	Red	Kırmızı	A Inverted Channel
B	Yellow	Sarı	B Channel
B'	Pink	Pembe	B Inverted Channel
Z	Gray	Gri	Z Channel
Z'	Blue	Mavi	Z Inverted Channel
Shield	Black	Siyah	Shield

Encoder Part Number

FNC | 50 | HB | C | 6 | 30V | 8192 | – | R2

Housing:
50 : 50mm

Flange Type:
HB : Conic shaft back screw mounting

Shaft diameter : 1/10 conic shaft
Other dimensions on request

Output Channels
1 : A
2 : AB
3 : ABZ
4 : AB+A' B'
6 : ABZ+A' B' Z'

Electrical Connections:

Cable
R2 : radial 2m, shield not connected (standart)

Connector:
CRM1204 CRM1212
CRM1205 CRM1607
CRM1208 CRM1614

PPR Options :
1024 - 2048 - 4096 - 5000 - 8192 - 10.000 standard PPRs
1 to 65.536 optional

Supply Voltage and output circuit :
5V : 5V in / out
245V : 5-30V in 5V out
30V : 5-30V in / out

FNC 540B Series

Features

- **Industry 50 mm size, 20mm diameter clamping flange**
- **Compatible with universal 40 mm encoders**
- **Robust Mechanical and Electrical Construction**
- **Protection up to IP67**
- **Up to 5000 PPR max.**
- **<300 kHz frequency**

PPR Options :

1 to 128 - 25 - 50 - 100 - 200 - 250 - 300 - 360 - 400 - 500 - 512 - 600 - 720 - 800 - 900 - 1000 - 1024 - 1250 - 1440 - 2000 - 2048 - 2500 - 3000 - 3600 - 4000 - 5000

Technical data - electrical ratings

Voltage supply	4.75VDC to 30VDC 4.75VDC to 5.5VDC
Protection:	Output short circuit protection. Reverse polarity protection (except 5V version)
Consumption w/o load	≤60 mA (24 VDC)
Resolution (steps/turn)	1...5000
Reference signal	Zero pulse, width 90° 180°, 360° optional
Optoelectronic life time	100.000 (min)
Output frequency	>200 kHz
Output signals	90° shifted A and B, Z + inverted
Output circuit	Linedriver/RS422 Push-pull short-circuit proof NPN Open Collector
Interference immunity	DIN EN 61000-6-2
Emitted interference	DIN EN 61000-6-4
Approval	CE

Technical data - mechanical design

Dimensions (flange)	ø50 mm
Shaft loading	≤60 N axial ≤80 N radial
Protection DIN EN 60529	IP54, IP65
Operating speed	≤10000 rpm
Starting torque	≤0.025 Nm (IP 67)
Materials	Housing: Aluminium Flange: Aluminium Shaft : Stainless steel
Shaft diameter:	6, 8, 10 mm (other diameters on request)
Bearings lifetime:	$2x10^9$ rev. at 100% of full rated shaft load (minimum)
Operating temperature	-20...+85 °C
Storage temperature	-30 °C up to +90 °C
Weight approx.	200 g

Accessories

Connectors and cables
CRM1204 M12 4 poles female connector or see page 160

Mounting coupling
SK240606 plastic or see page 158

Mounting accessories
YY RST Spring or see page 156-157

FNC 540B Series

Mechanical Dimensions

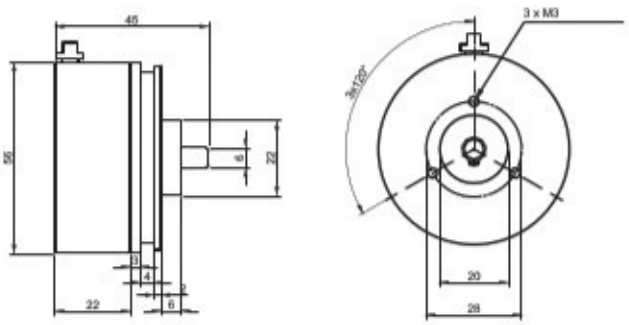

Pulse Diagram

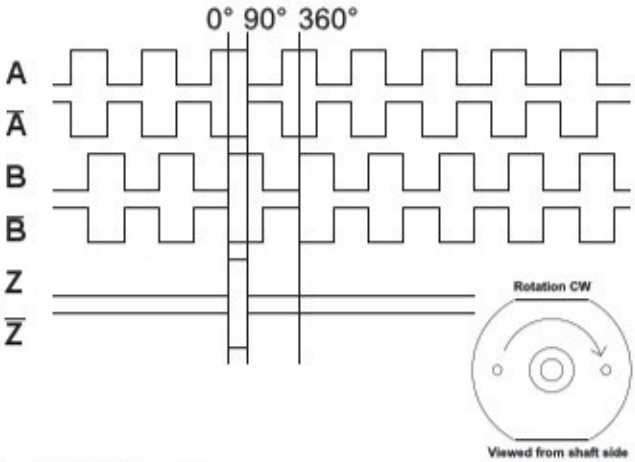

Connector Wiring

Connector Type	+Vcc	GND	A	A'	B	B'	Z	Z'	Shield
CRM1204	1	2	3		4				o.r.
CRM1205	1	2	3		4		5		o.r.
CRM1208	1	2	3	6	4	7	5	8	o.r.
CRM1212	1	2	3	6	4	7	5	8	o.r.
CRM1607	1	2	3		4		5		o.r.
CRM1614	Customer Specific								o.r.
CRM2312R	2-12	10-11	5	6	8	1	3	4	o.r.
CRM2312L	2-12	10-11	5	6	8	1	3	4	o.r.

For further information please see page 112

Cable Wiring

Function	Color	Renk	Explanation
+VB	Brown	Kahve	Supply Voltage
GND	White	Beyaz	Ground
A	Green	Yeşil	A Channel
A'	Red	Kırmızı	A Inverted Channel
B	Yellow	Sarı	B Channel
B'	Pink	Pembe	B Inverted Channel
Z	Gray	Gri	Z Channel
Z'	Blue	Mavi	Z Inverted Channel
Shield	Black	Siyah	Shield

Encoder Part Number

FNC | 540 | B | 6 | 6 | 30V | 1024 | – | R2

Housing:
50 : 50mm

Flange Type:
S : Servo flange
B : Clamping flange

Shaft diameter : 4, 6, 8, 10
Other dimensions on request

Output Channels
1 : A
2 : AB
3 : ABZ
4 : AB+A' B'
6 : ABZ+A' B' Z'

Electrical Connections:

Cable
R2 : radial 2m, shield not connected (standart)
A2 : axial 2m, shield not connected (standart)

Connector:

CRM1204	CRM1607
CRM1205	CRM1614
CRM1208	CRM2312R
CRM1212	CRM2312L

PPR Options :

1 to 128 - 25 - 50 - 100 - 200 - 250 - 300 - 360 - 400 - 500 - 512 - 600 - 720 - 800 - 900 - 1000 - 1024 - 1250 - 2000 - 2048 - 2500 - 3000 - 3600 - 4000 - 5000

Supply Voltage and output circuit :

5V : 5Vin / out
245V : 5-30Vin 5Vout
30V : 5-30Vin / out

FNC 58S Series

Features

- **Industry 58 mm standart size, servo flange**
- **Robust mechanical and electrical construction**
- **Protection up to IP67**
- **Up to 25.000 PPR max.**
- **<300 kHz frequency**

PPR Options :

1 to 128 - 25 - 50 - 100 - 200 - 250 - 300 - 360 - 400 - 500 - 512 - 600 - 720 - 800 - 900 - 1000 - 1024 - 1250 - 1440 - 2000 - 2048 - 2500 - 3000 - 3600 - 4000 - 4096 - 5000 - 6000 - 8192 - 10000 - 12500 - 16384 - 20000 - 25000

Technical data - electrical ratings

Voltage supply	4.75VDC to 30VDC 4.75VDC to 5.5VDC
Protection:	Output short circuit protection. Reverse polarity protection (except 5V version)
Consumption w/o load	≤60 mA (24 VDC)
Resolution (steps/turn)	1...25.000
Reference signal	Zero pulse, width 90° 180°, 360° optional
Optoelectronic life time	100.000 (min)
Output frequency	>200 kHz
Output signals	90° shifted A and B, Z + inverted
Output circuit	Linedriver/RS422 Push-pull short-circuit proof NPN Open Collector
Interference immunity	DIN EN 61000-6-2
Emitted interference	DIN EN 61000-6-4
Approval	CE

Technical data - mechanical design

Dimensions (flange)	ø58 mm
Shaft loading	≤80 N axial ≤100 N radial
Protection DIN EN 60529	IP54, IP65
Operating speed	≤10000 rpm
Starting torque	≤0.025 Nm (IP 67)
Materials	Housing: Aluminium Flange: Aluminium Shaft : Stainless steel
Shaft diameter:	6, 8, 10, 12 mm (other diameters on request)
Bearings lifetime:	$2x10^9$ rev. at 100% of full rated shaft load (minimum)
Operating temperature	-20...+85 °C
Storage temperature	-30 °C up to +90 °C
Weight approx.	200 g

Accessories

Connectors and cables
CRM1204 M12 4 poles female connector or see page 160

Mounting coupling
SK240606 plastic or see page 158

Mounting accessories
YY RST Spring or see page 156-157

FNC 58S Series

Mechanical Dimensions

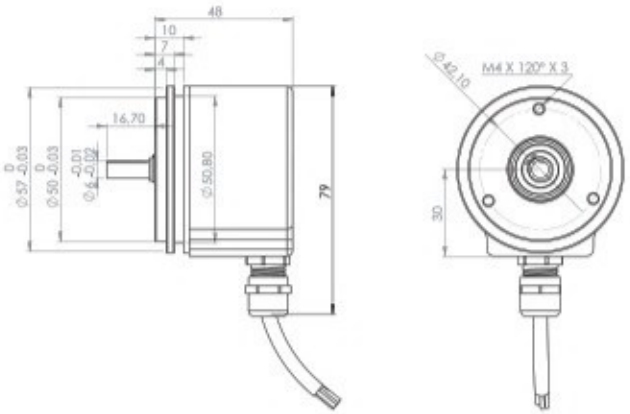

Pulse Diagram

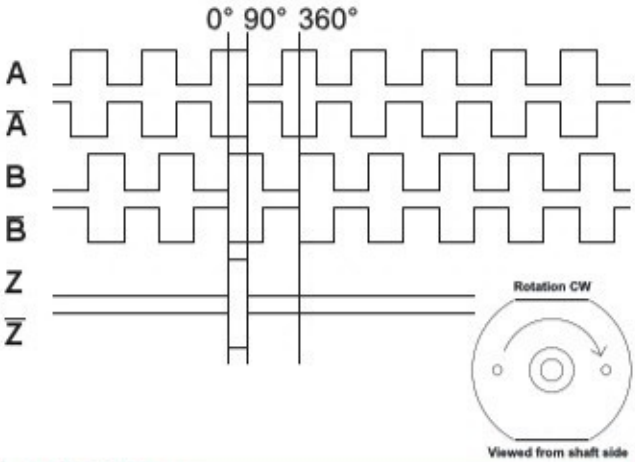

Connector Wiring

Connector Type	+Vcc	GND	A	A'	B	B'	Z	Z'	Shield
CRM1204	1	2	3		4				o.r.
CRM1205	1	2	3		4		5		o.r.
CRM1208	1	2	3	6	4	7	5	8	o.r.
CRM1212	1	2	3	6	4	7	5	8	o.r.
CRM1607	1	2	3		4		5		o.r.
CRM1614	Customer Specific								o.r.
CRM2312R	2-12	10-11	5	6	8	1	3	4	o.r.
CRM2312L	2-12	10-11	5	6	8	1	3	4	o.r.

For further information please see page 112

Cable Wiring

Function	Color	Renk	Explanation
+VB	Brown	Kahve	Supply Voltage
GND	White	Beyaz	Ground
A	Green	Yeşil	A Channel
A'	Red	Kırmızı	A Inverted Channel
B	Yellow	Sarı	B Channel
B'	Pink	Pembe	B Inverted Channel
Z	Gray	Gri	Z Channel
Z'	Blue	Mavi	Z Inverted Channel
Shield	Black	Siyah	Shield

Encoder Part Number

FNC | 58 | S | 8 | 6 | 30V | 1024 | – | R2

Housing:
58 : 58mm

Flange Type:
S : Servo flange
B : Clamping flange

Shaft diameter : 6, 8, 10
Other dimensions on request

Output Channels
1 : A
2 : AB
3 : ABZ
4 : AB+A' B'
6 : ABZ+A' B' Z'

Electrical Connections:

Cable
R2 : radial 2m, shield not connected (standart)
A2 : axial 2m, shield not connected (standart)

Connector:
CRM1204 CRM1607
CRM1205 CRM1614
CRM1208 CRM2312R
CRM1212 CRM2312L

PPR Options :
1 to 128 - 25 - 50 - 100 - 200 - 250 - 300 - 360 - 400 - 500 - 512 - 600 - 720 - 800 - 900 - 1000 - 1024 - 1250 - 1440 - 2000 - 2048 - 2500 - 3000 - 3600 - 4000 - 4096 - 5000 - 6000 - 8192 - 10000 - 12500 - 16384 - 20000 - 25000

Supply Voltage and output circuit :
5V : 5Vin / out
245V : 5-30Vin 5Vout
30V : 5-30Vin / out

Incremental encoders
Two Independent / Redundant Outputs

Resolution 1...25.000 pulses

FNC 58S Double Out Series

Two Independent Output Options

Features

- **Industry 58 mm standard size, servo flange**
- **Robust mechanical and electrical construction**
- **Protection up to IP67**
- **Up to 25.000 PPR max.**
- **<300 kHz frequency**
- **Redundant Independent Outputs**

PPR Options :

1 to 128 - 25 - 50 - 100 - 200 - 250 - 300 - 360 - 400 - 500 - 512 - 600 - 720 - 800 - 900 - 1000 - 1024 - 1250 - 1440 - 2000 - 2048 - 2500 - 3000 - 3600 - 4000 - 4096 - 5000 - 6000 - 8192 - 10000 - 12500 - 16384 - 20000 - 25000

Technical data - electrical ratings

Voltage supply	4.75VDC to 30VDC 4.75VDC to 5.5VDC
Protection:	Output short circuit protection. Reverse polarity protection (except 5V version)
Consumption w/o load	≤60 mA (24 VDC)
Resolution (steps/turn)	1... up to 65536
Reference signal	Zero pulse, width 90° 180°, 360° optional
Optoelectronic life time	100.000 (min)
Output frequency	>200 kHz
Output signals	90° shifted A and B, Z + inverted
Output circuit	Linedriver/RS422 Push-pull short-circuit proof NPN Open Collector
Interference immunity	DIN EN 61000-6-2
Emitted interference	DIN EN 61000-6-4
Approval	CE

Technical data - mechanical design

Dimensions (flange)	ø58 mm
Shaft loading	≤80 N axial ≤100 N radial
Protection DIN EN 60529	IP54, IP65
Operating speed	≤10000 rpm
Starting torque	≤0.025 Nm (IP 67)
Materials	Housing: Aluminium Flange: Aluminium Shaft : Stainless steel
Shaft diameter:	6, 8, 10, 12 mm (other diameters on request)
Bearings lifetime:	$2x10^9$ rev. at 100% of full rated shaft load (minimum)
Operating temperature	-20...+85 °C
Storage temperature	-30 °C up to +90 °C
Weight approx.	200 g

Accessories

Connectors and cables
CRM1204 M12 4 poles female connector or see page 160

Mounting coupling
SK240606 plastic or see page 158

Mounting accessories
YY RST Spring or see page 156-157

FNC 58S Double Out Series

Mechanical Dimensions

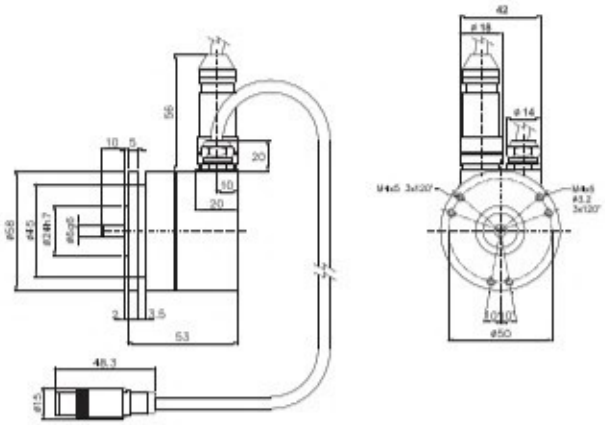

Pulse Diagram

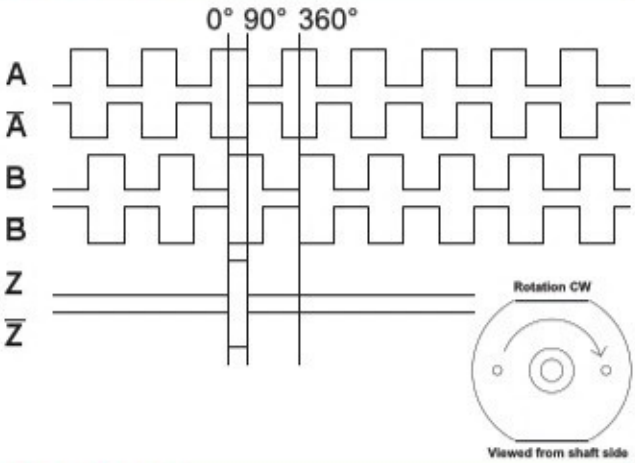

Connector Wiring

MM1205

	PIN
+V	2
0V	1
A	3
B	4
0	5
Gnd	Chassi

FM1204

	PIN
0V	1
-A	4
0V	3
-B	2

For further information please see page 112

Cable Wiring

Function	Color	Renk	Explanation
+VB	Brown	Kahve	Supply Voltage
GND	White	Beyaz	Ground
A	Green	Yeşil	A Channel
A'	Red	Kırmızı	A Inverted Channel
B	Yellow	Sarı	B Channel
B'	Pink	Pembe	B Inverted Channel
Z	Gray	Gri	Z Channel
Z'	Blue	Mavi	Z Inverted Channel
Shield	Black	Siyah	Shield

Encoder Part Number

FNC | **58** | **S** | **6** | **6** | **30V** | **PPR1** + **PPR2**

Housing:
58 : 58mm

Flange Type:
S : Servo flange

Shaft diameter : 4, 6, 8, 10, 12, 14
Other dimensions on request

Output Channels
6 : ABZ+A' B' Z'

Electrical Connections:
Customer Specific / Two Independent Options Available

PPR Options :
1 to 128 - 25 - 50 - 100 - 200 - 250 - 300 - 360 - 400 - 500 - 512 - 600 - 720 - 800 - 900 - 1000 - 1024 - 1250 - 1440 - 2000 - 2048 - 2500 - 3000 - 3600 - 4000 - 4096 - 5000 - 6000 - 8192 - 10000 - 12500 - 16384 - 20000 - 25000

Supply Voltage and output circuit :
5V : 5V in / out
245V : 5-30V in 5V out
30V : 5-30V in / out

FNC 58B / 58D Series

Features

- **Industry 58 mm standart size, clamping flange**
- **Robust mechanical and electrical construction**
- **Protection up to IP67**
- **Up to 25.000 PPR max.**
- **<300 kHz frequency**

PPR Options :

1 to 128 - 25 - 50 - 100 - 200 - 250 - 300 - 360 - 400 - 500 - 512 - 600 - 720 - 800 - 900 - 1000 - 1024 - 1250 - 1440 - 2000 - 2048 - 2500 - 3000 - 3600 - 4000 - 4096 - 5000 - 6000 - 8192 - 10000 - 12500 - 16384 - 20000 - 25000

Technical data - electrical ratings

Voltage supply	4.75VDC to 30VDC 4.75VDC to 5.5VDC
Protection:	Output short circuit protection. Reverse polarity protection (except 5V version)
Consumption w/o load	≤60 mA (24 VDC)
Resolution (steps/turn)	1...25.000 up to 65536
Reference signal	Zero pulse, width 90° 180°, 360° optional
Optoelectronic life time	100.000 (min)
Output frequency	>200 kHz
Output signals	90° shifted A and B, Z + inverted
Output circuit	Linedriver/RS422 Push-pull short-circuit proof NPN Open Collector
Interference immunity	DIN EN 61000-6-2
Emitted interference	DIN EN 61000-6-4
Approval	CE

Technical data - mechanical design

Dimensions (flange)	ø58 mm
Shaft loading	≤120 N axial ≤160 N radial
Protection DIN EN 60529	IP54, IP65
Operating speed	≤10000 rpm
Starting torque	≤0.025 Nm (IP 67)
Materials	Housing: Aluminium Flange: Aluminium Shaft : Stainless steel
Shaft diameter:	6, 8, 10, 12, 14 mm (other diameters on request)
Bearings lifetime:	$2x10^9$ rev. at 100% of full rated shaft load (minimum)
Operating temperature	-20...+85 °C
Storage temperature	-30 °C up to +90 °C
Weight approx.	250 g

Accessories

Connectors and cables
CRM1204 M12 4 poles female connector or see page 160

Mounting coupling
SK240606 plastic or see page 158

Mounting accessories
YY RST Spring or see page 156-157

FNC 58B / 58D Series

Mechanical Dimensions

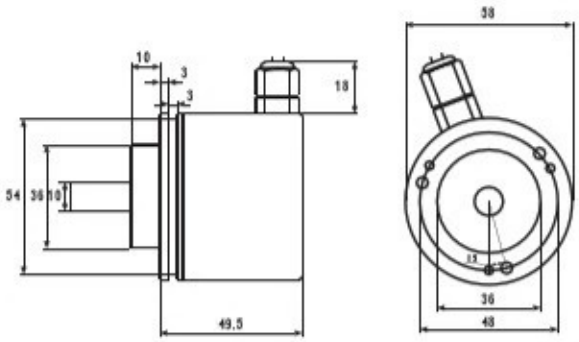

Pulse Diagram

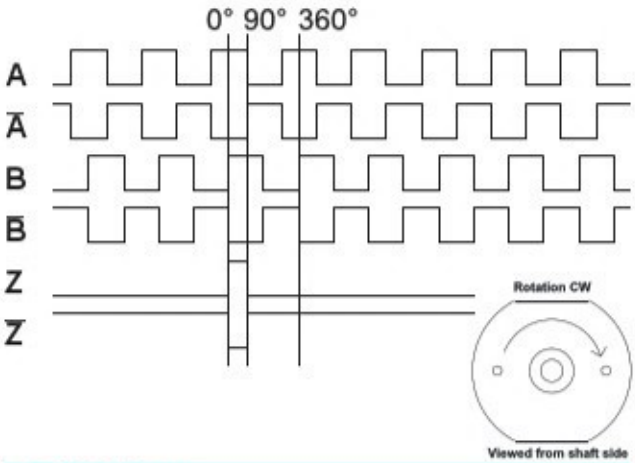

Connector Wiring

Connector Type	+Vcc	GND	A	A'	B	B'	Z	Z'	Shield
CRM1204	1	2	3		4				o.r.
CRM1205	1	2	3		4		5		o.r.
CRM1208	1	2	3	6	4	7	5	8	o.r.
CRM1212	1	2	3	6	4	7	5	8	o.r.
CRM1607	1	2	3		4		5		o.r.
CRM1614	Customer Specific								o.r.
CRM2312R	2-12	10-11	5	6	8	1	3	4	o.r.
CRM2312L	2-12	10-11	5	6	8	1	3	4	o.r.

For further information please see page 112

Cable Wiring

Function	Color	Renk	Explanation
+VB	Brown	Kahve	Supply Voltage
GND	White	Beyaz	Ground
A	Green	Yeşil	A Channel
A'	Red	Kırmızı	A Inverted Channel
B	Yellow	Sarı	B Channel
B'	Pink	Pembe	B Inverted Channel
Z	Gray	Gri	Z Channel
Z'	Blue	Mavi	Z Inverted Channel
Shield	Black	Siyah	Shield

Encoder Part Number

FNC | 58 | B | 8 | 6 | 30V | 1024 | – | R2

Housing:
58 : 58mm

Flange Type:
B : Clamp Diameter 36 mm
D : Clamp Diameter 32 mm

Shaft diameter : 4, 6, 8, 10, 12, 14
Other dimensions on request

Output Channels
1 : A
2 : AB
3 : ABZ
4 : AB+A' B'
6 : ABZ+A' B' Z'

Electrical Connections:

Cable
R2 : radial 2m, shield not connected (standart)
A2 : axial 2m, shield not connected (standart)

Connector:

CRM1204	CRM1607
CRM1205	CRM1614
CRM1208	CRM2312R
CRM1212	CRM2312L

PPR Options :
1 to 128 - 25 - 50 - 100 - 200 - 250 - 300 - 360 - 400 - 500 - 512 - 600 - 720 - 800 - 900 - 1000 - 1024 - 1250 - 1440 - 2000 - 2048 - 2500 - 3000 - 3600 - 4000 - 4096 - 5000 - 6000 - 8192 - 10000 - 12500 - 16384 - 20000 - 25000

Supply Voltage and output circuit :
5V : 5Vin / out
245V : 5-30Vin 5Vout
30V : 5-30Vin / out

FNC 58SC Series

Features

- **Industry 58 mm standart size, clamping flange**
- **Robust mechanical and electrical construction**
- **Protection up to IP67**
- **Up to 25.000 PPR max.**
- **<300 kHz frequency**

PPR Options :

1 to 128 - 25 - 50 - 100 - 200 - 250 - 300 - 360 - 400 - 500 - 512 - 600 - 720 - 800 - 900 - 1000 - 1024 - 1250 - 1440 - 2000 - 2048 - 2500 - 3000 - 3600 - 4000 - 4096 - 5000 - 6000 - 8192 - 10000 - 12500 - 16384 - 20000 - 25000

Technical data - electrical ratings

Voltage supply	4.75VDC to 30VDC 4.75VDC to 5.5VDC
Protection:	Output short circuit protection. Reverse polarity protection (except 5V version)
Consumption w/o load	≤60 mA (24 VDC)
Resolution (steps/turn)	1...25.000 up to 65536
Reference signal	Zero pulse, width 90° 180°, 360° optional
Optoelectronic life time	100.000 (min)
Output frequency	>200 kHz
Output signals	90° shifted A and B, Z + inverted
Output circuit	Linedriver/RS422 Push-pull short-circuit proof NPN Open Collector
Interference immunity	DIN EN 61000-6-2
Emitted interference	DIN EN 61000-6-4
Approval	CE

Technical data - mechanical design

Dimensions (flange)	ø58 mm
Shaft loading	≤120 N axial ≤160 N radial
Protection DIN EN 60529	IP54, IP65
Operating speed	≤10000 rpm
Starting torque	≤0.025 Nm (IP 67)
Materials	Housing: Aluminium Flange: Aluminium Shaft : Stainless steel
Shaft diameter:	6, 8, 10, 12 mm (other diameters on request)
Bearings lifetime:	$2x10^9$ rev. at 100% of full rated shaft load (minimum)
Operating temperature	-20...+85 °C
Storage temperature	-30 °C up to +90 °C
Weight approx.	250 g

Accessories

Connectors and cables
CRM1204 M12 4 poles female connector or see page 160

Mounting coupling
SK240606 plastic or see page 158

Mounting accessories
YY RST Spring or see page 156-157

FNC 58SC Series

Mechanical Dimensions

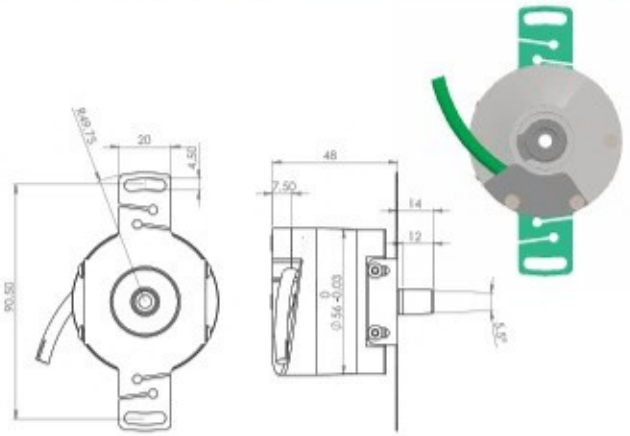

Pulse Diagram

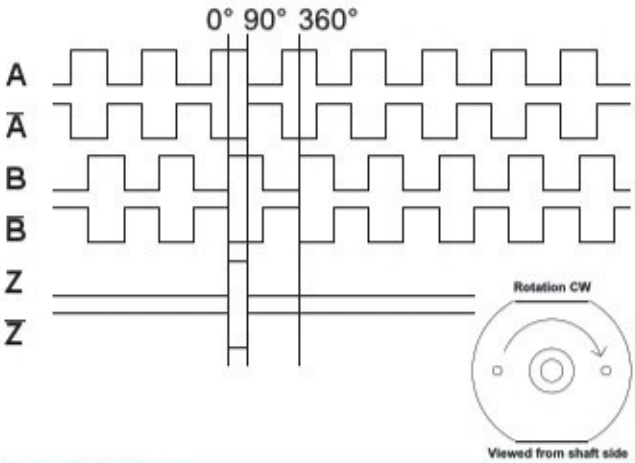

Connector Wiring

Connector Type	+Vcc	GND	A	A'	B	B'	Z	Z'	Shield
CRM1204	1	2	3		4				o.r.
CRM1205	1	2	3		4		5		o.r.
CRM1208	1	2	3	6	4	7	5	8	o.r.
CRM1212	1	2	3	6	4	7	5	8	o.r.
CRM1607	1	2	3		4		5		o.r.
CRM1614	Customer Specific								o.r.
CRM2312R	2-12	10-11	5	6	8	1	3	4	o.r.
CRM2312L	2-12	10-11	5	6	8	1	3	4	o.r.

For further information please see page 112

Cable Wiring

Function	Color	Renk	Explanation
+VB	Brown	Kahve	Supply Voltage
GND	White	Beyaz	Ground
A	Green	Yeşil	A Channel
A'	Red	Kırmızı	A Inverted Channel
B	Yellow	Sarı	B Channel
B'	Pink	Pembe	B Inverted Channel
Z	Gray	Gri	Z Channel
Z'	Blue	Mavi	Z Inverted Channel
Shield	Black	Siyah	Shield

Encoder Part Number

FNC | 58 | SC | 6 | 30V | 1024 | – | R2

Housing:
58 : 58mm

Flange Type:
SC : 58 mm with conic shaft

Output Channels
1 : A
2 : AB
3 : ABZ
4 : AB+A' B'
6 : ABZ+A' B' Z'

Electrical Connections:
Cable
R2 : radial 2m, shield not connected (standart)
A2 : axial 2m, shield not connected (standart)
K12 : 12 pin socket connection

Connector:

CRM1204	CRM1607
CRM1205	CRM1614
CRM1208	CRM2312R
CRM1212	CRM2312L

PPR Options :
1 to 128 - 25 - 50 - 100 - 200 - 250 - 300 - 360 - 400 - 500 - 512 - 600 - 720 - 800 - 900 - 1000 - 1024 - 1250 - 1440 - 2000 - 2048 - 2500 - 3000 - 3600 - 4000 - 4096 - 5000 - 6000 - 8192 - 10000 - 12500 - 16384 - 20000 - 25000

Supply Voltage and output circuit :
5V : 5Vin / out
245V : 5-30Vin 5Vout
30V : 5-30Vin / out

FNC 63K - 63D Series, Sqaure Flange

Features

- **Industry 63 mm special size, square flange**
- **Robust mechanical and electrical construction**
- **Protection up to IP67**
- **Up to 5.000 PPR max.**
- **<300 kHz frequency**

PPR Options :

1 to 128 - 25 - 50 - 100 - 200 - 250 - 300 - 360 - 400 - 500 - 512 - 600 - 720 - 800 - 900 - 1000 - 1024 - 1250 - 2000 - 2048 - 2500 - 3000 - 3600 - 4000 - 4096 - 5000

Technical data - electrical ratings

Voltage supply	4.75VDC to 30VDC 4.75VDC to 5.5VDC
Protection:	Output short circuit protection. Reverse polarity protection (except 5V version)
Consumption w/o load	≤60 mA (24 VDC)
Resolution (steps/turn)	1...5.000 up to 65536
Reference signal	Zero pulse, width 90° 180°, 360° optional
Optoelectronic life time	100.000 (min)
Output frequency	>200 kHz
Output signals	90° shifted A and B, Z + inverted
Output circuit	Linedriver/RS422 Push-pull short-circuit proof NPN Open Collector
Interference immunity	DIN EN 61000-6-2
Emitted interference	DIN EN 61000-6-4
Approval	CE

Technical data - mechanical design

Dimensions (flange)	ø63 mm
Shaft loading	≤120 N axial ≤160 N radial
Protection DIN EN 60529	IP54, IP65
Operating speed	≤10000 rpm
Starting torque	≤0.025 Nm (IP 67)
Materials	Housing: Aluminium Flange: Aluminium Shaft : Stainless steel
Shaft diameter:	6, 8, 10, 12, 14 mm (other diameters on request)
Bearings lifetime:	$2x10^9$ rev. at 100% of full rated shaft load (minimum)
Operating temperature	-20...+85 °C
Storage temperature	-30 °C up to +90 °C
Weight approx.	200 g

Accessories

Connectors and cables
CRM1204 M12 4 poles female connector or see page 160

Mounting coupling
SK240606 plastic or see page 158

Mounting accessories
YY RST Spring or see page 156-157

FNC 63K - 63D Series, Sqaure Flange

Mechanical Dimensions

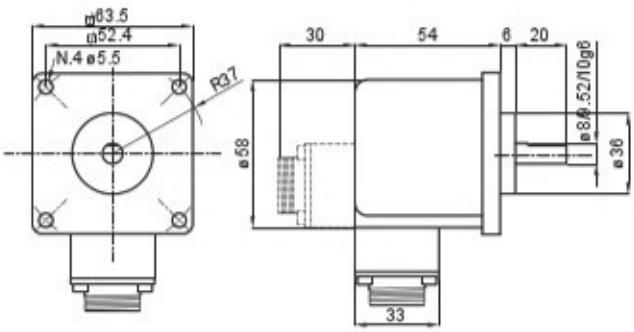

Pulse Diagram

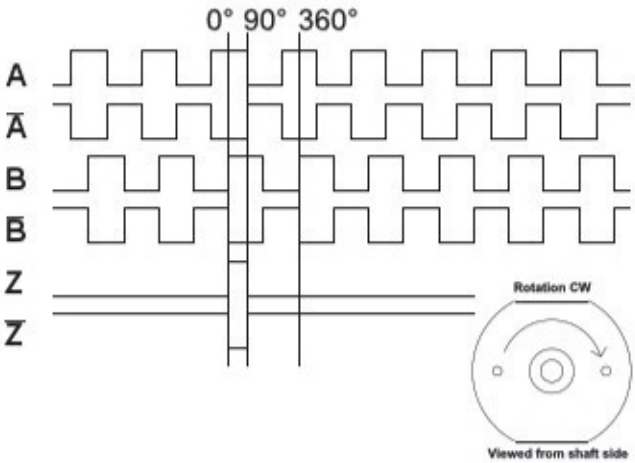

Connector Wiring

Connector Type	+Vcc	GND	A	A'	B	B'	Z	Z'	Shield
CRM1204	1	2	3		4				o.r.
CRM1205	1	2	3		4		5		o.r.
CRM1208	1	2	3	6	4	7	5	8	o.r.
CRM1212	1	2	3	6	4	7	5	8	o.r.
CRM1607	1	2	3		4		5		o.r.
CRM1614	Customer Specific								o.r.
CRM2312R	2-12	10-11	5	6	8	1	3	4	o.r.
CRM2312L	2-12	10-11	5	6	8	1	3	4	o.r.

For further information please see page 112

Cable Wiring

Function	Color	Renk	Explanation
+VB	Brown	Kahve	Supply Voltage
GND	White	Beyaz	Ground
A	Green	Yeşil	A Channel
A'	Red	Kırmızı	A Inverted Channel
B	Yellow	Sarı	B Channel
B'	Pink	Pembe	B Inverted Channel
Z	Gray	Gri	Z Channel
Z'	Blue	Mavi	Z Inverted Channel
Shield	Black	Siyah	Shield

Encoder Part Number

FNC | 63 | K | 10 | 6 | 30V | 1024 | – | R2

Housing:
63 : 63mm

Flange Type:
K : Square flange, 36mm clamp
D : Square flange, 32mm clamp

Shaft diameter : 10, 12, 14
Other dimensions on request

Output Channels
1 : A
2 : AB
3 : ABZ
4 : AB+A' B'
6 : ABZ+A' B' Z'

Electrical Connections:

Cable
R2 : radial 2m, shield not connected (standart)
A2 : axial 2m, shield not connected (standart)

Connector:

CRM1204	CRM1607
CRM1205	CRM1614
CRM1208	CRM2312R
CRM1212	CRM2312L

PPR Options :

1 to 128 - 25 - 50 - 100 - 200 - 250 - 300 - 360 - 400 - 500 - 512 - 600 - 720 - 800 - 900 - 1000 - 1024 - 1250 - 2000 - 2048 - 2500 - 3000 - 3600 - 4000 - 4096 - 5000

Supply Voltage and output circuit :
5V : 5Vin / out
245V : 5-30Vin 5Vout
30V : 5-30Vin / out

FNC 64S & 80S Series

Features

- **Industry 64 mm special size, servo flange**
- **Robust mechanical and electrical construction**
- **Protection up to IP67**
- **Up to 5.000 PPR max.**
- **<300 kHz frequency**

PPR Options :

1 to 128 - 25 - 50 - 100 - 200 - 250 - 300 - 360 - 400 - 500 - 512 - 600 - 720 - 800 - 900 - 1000 - 1024 - 1250 - 2000 - 2048 - 2500 - 3000 - 3600 - 4000 - 4096 - 5000

Technical data - electrical ratings

Voltage supply	4.75VDC to 30VDC 4.75VDC to 5.5VDC
Protection:	Output short circuit protection. Reverse polarity protection (except 5V version)
Consumption w/o load	≤60 mA (24 VDC)
Resolution (steps/turn)	1...5.000 up to 65536
Reference signal	Zero pulse, width 90° 180°, 360° optional
Optoelectronic life time	100.000 (min)
Output frequency	>200 kHz
Output signals	90° shifted A and B, Z + inverted
Output circuit	Linedriver/RS422 Push-pull short-circuit proof NPN Open Collector
Interference immunity	DIN EN 61000-6-2
Emitted interference	DIN EN 61000-6-4
Approval	CE

Technical data - mechanical design

Dimensions (flange)	ø64 mm
Shaft loading	≤120 N axial ≤160 N radial
Protection DIN EN 60529	IP54, IP65
Operating speed	≤10000 rpm
Starting torque	≤0.025 Nm (IP 67)
Materials	Housing: Aluminium Flange: Aluminium Shaft : Stainless steel
Shaft diameter:	6, 8, 10, 12 mm (other diameters on request)
Bearings lifetime:	$2x10^9$ rev. at 100% of full rated shaft load (minimum)
Operating temperature	-20...+85 °C
Storage temperature	-30 °C up to +90 °C
Weight approx.	200 g

Accessories

Connectors and cables
CRM1204 M12 4 poles female connector or see page 160

Mounting coupling
SK240606 plastic or see page 158

Mounting accessories
YY RST Spring or see page 156-157

FNC 64S & 80S Series

Mechanical Dimensions

64S

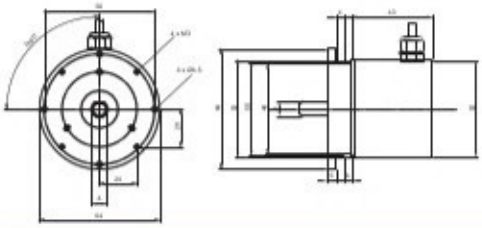

80S

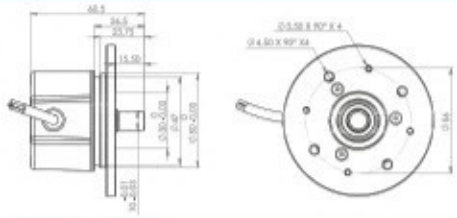

Pulse Diagram

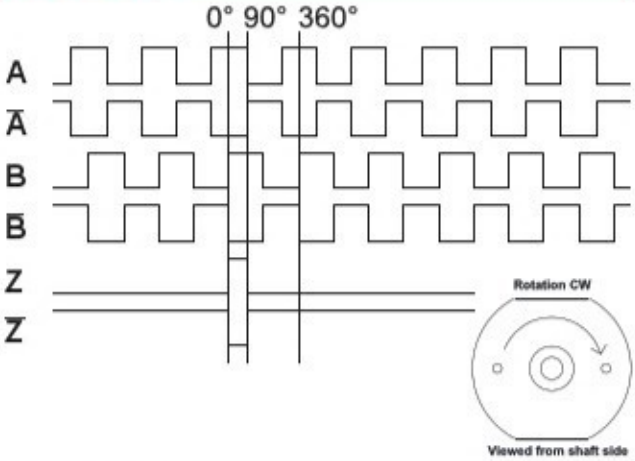

Connector Wiring

Connector Type	+Vcc	GND	A	A'	B	B'	Z	Z'	Shield
CRM1204	1	2	3		4				o.r.
CRM1205	1	2	3		4		5		o.r.
CRM1208	1	2	3	6	4	7	5	8	o.r.
CRM1212	1	2	3	6	4	7	5	8	o.r.
CRM1607	1	2	3		4		5		o.r.
CRM1614	Customer Specific								o.r.
CRM2312R	2-12	10-11	5	6	8	1	3	4	o.r.
CRM2312L	2-12	10-11	5	6	8	1	3	4	o.r.

For further information please see page 112

Cable Wiring

Function	Color	Renk	Explanation
+VB	Brown	Kahve	Supply Voltage
GND	White	Beyaz	Ground
A	Green	Yeşil	A Channel
A'	Red	Kırmızı	A Inverted Channel
B	Yellow	Sarı	B Channel
B'	Pink	Pembe	B Inverted Channel
Z	Gray	Gri	Z Channel
Z'	Blue	Mavi	Z Inverted Channel
Shield	Black	Siyah	Shield

Encoder Part Number

FNC | 64 | S | 10 | 6 | 30V | 1024 | – | R2

Housing:
64 : 64mm
80 : 80mm

Flange Type:
S : Servo flange

Shaft diameter : 10, 12
Other dimensions on request

Output Channels
1 : A
2 : AB
3 : ABZ
4 : AB+A' B'
6 : ABZ+A' B' Z'

Electrical Connections:

Cable
R2 : radial 2m, shield not connected (standart)
A2 : axial 2m, shield not connected (standart)

Connector:

CRM1204	CRM1607
CRM1205	CRM1614
CRM1208	CRM2312R
CRM1212	CRM2312L

PPR Options :

1 to 128 - 25 - 50 - 100 - 200 - 250 - 300 - 360 - 400 - 500 - 512 - 600 - 720 - 800 - 900 - 1000 - 1024 - 1250 - 2000 - 2048 - 2500 - 3000 - 3600 - 4000 - 4096 - 5000

Supply Voltage and output circuit :

5V : 5Vin / out
245V : 5-30Vin 5Vout
30V : 5-30Vin / out

FNC 68K ALM Series

Features

- **Industry 68 mm special size, square flange**
- **Robust mechanical and electrical construction**
- **Protection up to IP67**
- **Up to 5.000 PPR max.**
- **<300 kHz frequency**

PPR Options :

1 to 128 - 25 - 50 - 100 - 200 - 250 - 300 - 360 - 400 - 500 - 512 - 600 - 720 - 800 - 900 - 1000 - 1024 - 1250 - 2000 - 2048 - 2500 - 3000 - 3600 - 4000 - 4096 - 5000

Technical data - electrical ratings

Voltage supply	4.75VDC to 30VDC 4.75VDC to 5.5VDC
Protection:	Output short circuit protection. Reverse polarity protection (except 5V version)
Consumption w/o load	≤60 mA (24 VDC)
Resolution (steps/turn)	1...5.000 up to 65536
Reference signal	Zero pulse, width 90° 180°, 360° optional
Optoelectronic life time	100.000 (min)
Output frequency	>200 kHz
Output signals	90° shifted A and B, Z + inverted
Output circuit	Linedriver/RS422 Push-pull short-circuit proof NPN Open Collector
Interference immunity	DIN EN 61000-6-2
Emitted interference	DIN EN 61000-6-4
Approval	CE

Technical data - mechanical design

Dimensions (flange)	ø68 mm
Shaft loading	≤120 N axial ≤160 N radial
Protection DIN EN 60529	IP54, IP65
Operating speed	≤10000 rpm
Starting torque	≤0.025 Nm (IP 67)
Materials	Housing: Aluminium Flange: Aluminium Shaft : Stainless steel
Shaft diameter:	6, 8, 10, 12 mm (other diameters on request)
Bearings lifetime:	$2x10^9$ rev. at 100% of full rated shaft load (minimum)
Operating temperature	-20...+85 °C
Storage temperature	-30 °C up to +90 °C
Weight approx.	200 g

Accessories

Connectors and cables
CRM1204 M12 4 poles female connector or see page 160

Mounting coupling
SK240606 plastic or see page 158

Mounting accessories
YY RST Spring or see page 156-157

FNC 68K ALM Series

Mechanical Dimensions

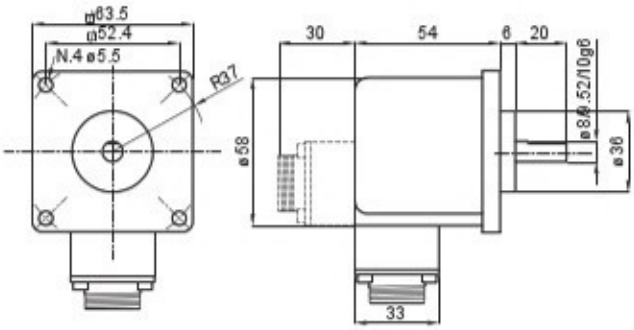

Pulse Diagram

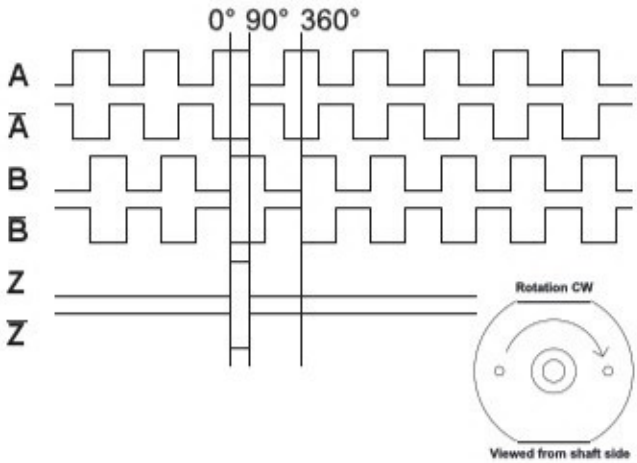

Connector Wiring

Pin	Assignment
A	A Channel
B	Z Channel
C	B Channel
E	Shield
H	Vcc
K	0V
N	A' Channel
P	Z' Channel
R	B' Channel

For further information please see page 112

Cable Wiring

Function	Color	Renk	Explanation
+VB	Brown	Kahve	Supply Voltage
GND	White	Beyaz	Ground
A	Green	Yeşil	A Channel
A'	Red	Kırmızı	A Inverted Channel
B	Yellow	Sarı	B Channel
B'	Pink	Pembe	B Inverted Channel
Z	Gray	Gri	Z Channel
Z'	Blue	Mavi	Z Inverted Channel
Shield	Black	Siyah	Shield

Encoder Part Number

FNC | 68 | K | 10 | 6 | 30V | 1024 | – | R2

Housing:
63 : 68mm

Flange Type:
K : Square flange, 36mm clamp
D : Square flange, 32mm clamp

Shaft diameter : 10, 12
Other dimensions on request

Output Channels
1 : A
2 : AB
3 : ABZ
4 : AB+A' B'
6 : ABZ+A' B' Z'

Electrical Connections:

Cable
R2 : radial 2m, shield not connected (standart)
A2 : axial 2m, shield not connected (standart)

Connector:

CRM1204	CRM1607
CRM1205	CRM1614
CRM1208	CRM2312R
CRM1212	CRM2312L

PPR Options :

1 to 128 - 25 - 50 - 100 - 200 - 250 - 300 - 360 - 400 - 500 - 512 - 600 - 720 - 800 - 900 - 1000 - 1024 - 1250 - 2000 - 2048 - 2500 - 3000 - 3600 - 4000 - 4096 - 5000

Supply Voltage and output circuit :
5V : 5Vin / out
245V : 5-30Vin 5Vout
30V : 5-30Vin / out

FNC 115S Series, tacho flange

Features

- **Digital Tachogenarator with robust tacho flange**
- **Industry 115 mm standart size**
- **High noise immunity against frequency inverters**
- **Protection up to IP67**
- **Up to 5.000 PPR max.**
- **<300 kHz frequency**

PPR Options :

1 to 128 - 25 - 50 - 100 - 200 - 250 - 300 - 360 - 400 - 500 - 512 - 600 - 720 - 800 - 900 - 1000 - 1024 - 1250 - 2000 - 2048 - 2500 - 3000 - 3600 - 4000 - 4096 - 5000

Technical data - electrical ratings

Voltage supply	4.75VDC to 30VDC 4.75VDC to 5.5VDC
Protection:	Output short circuit protection. Reverse polarity protection (except 5V version)
Consumption w/o load	≤60 mA (24 VDC)
Resolution (steps/turn)	1...up to 65536
Reference signal	Zero pulse, width 90° 180°, 360° optional
Optoelectronic life time	100.000 (min)
Output frequency	>200 kHz
Output signals	90° shifted A and B, Z + inverted
Output circuit	Linedriver/RS422 Push-pull short-circuit proof NPN Open Collector
Interference immunity	DIN EN 61000-6-2
Emitted interference	DIN EN 61000-6-4
Approval	CE

Technical data - mechanical design

Dimensions (flange)	ø115 mm
Shaft loading	≤120 N axial ≤160 N radial
Protection DIN EN 60529	IP54, IP65
Operating speed	≤10000 rpm
Starting torque	≤0.025 Nm (IP 67)
Materials	Housing: Aluminium Flange: Aluminium Shaft : Stainless steel
Shaft diameter:	6, 8, 10, 12 mm (other diameters on request)
Bearings lifetime:	$2x10^9$ rev. at 100% of full rated shaft load (minimum)
Operating temperature	-20...+85 °C
Storage temperature	-30 °C up to +90 °C
Weight approx.	500 g

Accessories

Connectors and cables
CRM1204 M12 4 poles female connector or see page 160

Mounting coupling
SK240606 plastic or see page 158

Mounting accessories
YY RST Spring or see page 156-157

FNC 115S Series, tacho flange

Mechanical Dimensions

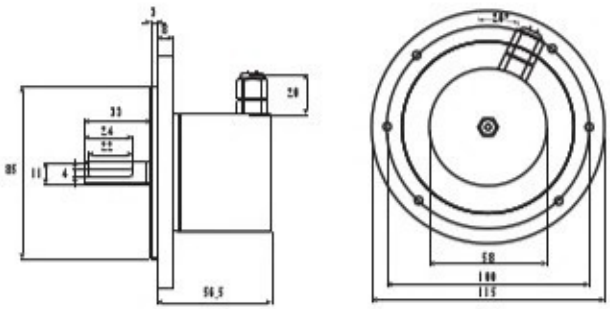

Pulse Diagram

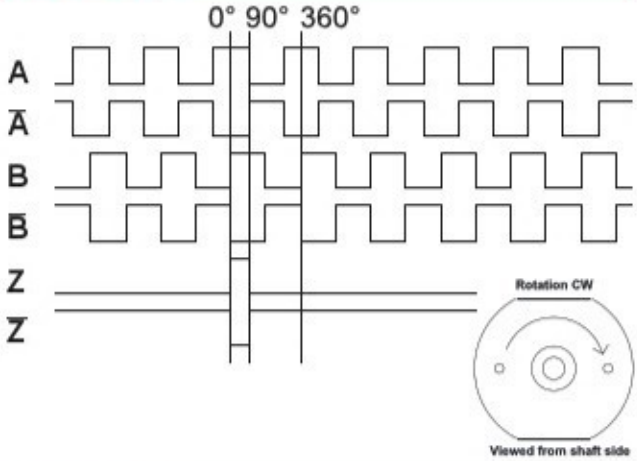

Connector Wiring

Connector Type	+Vcc	GND	A	A'	B	B'	Z	Z'	Shield
CRM1204	1	2	3		4				o.r.
CRM1205	1	2	3		4		5		o.r.
CRM1208	1	2	3	6	4	7	5	8	o.r.
CRM1212	1	2	3	6	4	7	5	8	o.r.
CRM1607	1	2	3		4		5		o.r.
CRM1614	Customer Specific								o.r.
CRM2312R	2-12	10-11	5	6	8	1	3	4	o.r.
CRM2312L	2-12	10-11	5	6	8	1	3	4	o.r.

For further information please see page 112

Cable Wiring

Function	Color	Renk	Explanation
+VB	Brown	Kahve	Supply Voltage
GND	White	Beyaz	Ground
A	Green	Yeşil	A Channel
A'	Red	Kırmızı	A Inverted Channel
B	Yellow	Sarı	B Channel
B'	Pink	Pembe	B Inverted Channel
Z	Gray	Gri	Z Channel
Z'	Blue	Mavi	Z Inverted Channel
Shield	Black	Siyah	Shield

Encoder Part Number

FNC | 115 | S | 11 | 6 | 30V | 1024 | – | R2

Housing:
115 : 115mm

Flange Type:
S : Servo (Tacho) flange

Shaft diameter : 11
Other dimensions on request

Output Channels
1 : A
2 : AB
3 : ABZ
4 : AB+A' B'
6 : ABZ+A' B' Z'

Electrical Connections:

Cable
R2 : radial 2m, shield not connected (standart)
A2 : axial 2m, shield not connected (standart)

Connector:

CRM1204	CRM1607
CRM1205	CRM1614
CRM1208	CRM2312R
CRM1212	CRM2312L

PPR Options :

1 to 128 - 25 - 50 - 100 - 200 - 250 - 300 - 360 - 400 - 500 - 512 - 600 - 720 - 800 - 900 - 1000 - 1024 - 1250 - 2000 - 2048 - 2500 - 3000 - 3600 - 4000 - 4096 - 5000

Supply Voltage and output circuit :

5V : 5Vin / out
245V : 5-30Vin 5Vout
30V : 5-30Vin / out

FNC 30E Series

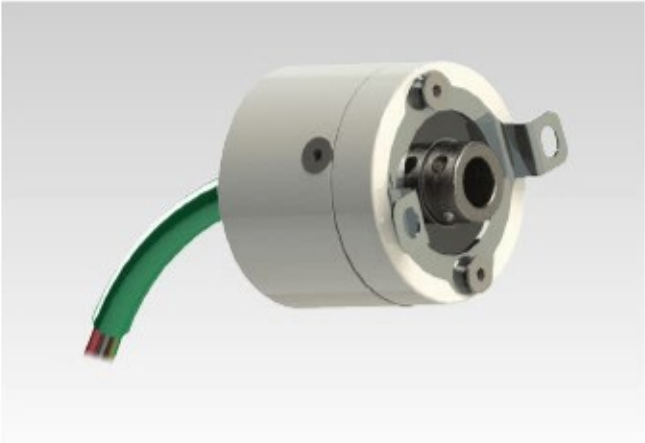

Features

- **Industry 30 mm special size, servo flange**
- **Robust mechanical and electrical construction**
- **Protection up to IP67**
- **Up to 2500 PPR max.**
- **<300 kHz frequency**

PPR Options :

1 to- 1024 all PPR, - 360 - 500 - 512 - 720 - 1000 - 1024
1440 - 2000 - 2048 -2500

Technical data - electrical ratings

Voltage supply	4.75VDC to 30VDC 4.75VDC to 5.5VDC
Protection:	Output short circuit protection. Reverse polarity protection (except 5V version)
Consumption w/o load	≤30 mA (24 VDC)
Resolution (steps/turn)	1...2500
Reference signal	Zero pulse, width 90° 180°, 360° optional
Optoelectronic life time	100.000 (min)
Output frequency	>200 kHz
Output signals	90° shifted A and B, Z + inverted
Output circuit	Linedriver/RS422 Push-pull short-circuit proof NPN Open Collector
Interference immunity	DIN EN 61000-6-2
Emitted interference	DIN EN 61000-6-4
Approval	CE

Technical data - mechanical design

Dimensions (flange)	ø30 mm
Shaft loading	≤20 N axial ≤30 N radial
Protection DIN EN 60529	IP54, IP65
Operating speed	≤10000 rpm
Starting torque	≤0.01 Nm (IP 67)
Materials	Housing: stainless steel Flange: stainless steel Shaft : stainless steel
Shaft Diameter:	4, 6, 8 mm (other diameters on request)
Bearings lifetime:	$2x10^9$ rev. at 100% of full rated shaft load (minimum)
Operating temperature	-20...+85 °C
Storage temperature	-30 °C up to +90 °C
Weight approx.	80 g

Accessories

Connectors and cables
CRM1204 M12 4 poles female connector or see page 160

Mounting coupling
SK240606 plastic or see page 158

Mounting accessories
YY RST Spring or see page 156-157

FNC 30E Series

Mechanical Dimensions

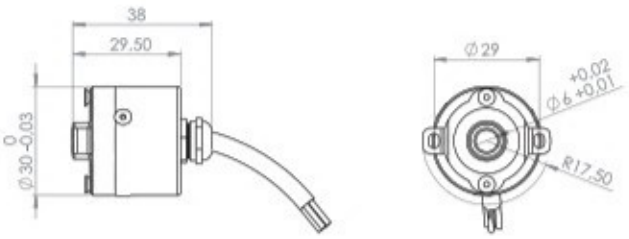

Pulse Diagram

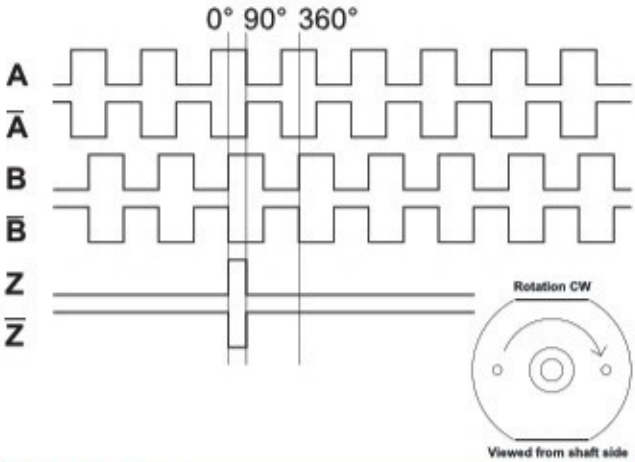

Connector Wiring

Connector Type	+Vcc	GND	A	A'	B	B'	Z	Z'	Shield
CRM1204	1	2	3		4				o.r.
CRM1205	1	2	3		4		5		o.r.
CRM1208	1	2	3	6	4	7	5	8	o.r.
CRM1212	1	2	3	6	4	7	5	8	o.r.
CRM1607	1	2	3		4		5		o.r.
CRM1614	Customer Specific								o.r.

For further information please see page 64

Cable Wiring

Function	Color	Renk	Explanation
+VB	Brown	Kahve	Supply Voltage
GND	White	Beyaz	Ground
A	Green	Yeşil	A Channel
A'	Red	Kırmızı	A Inverted Channel
B	Yellow	Sarı	B Channel
B'	Pink	Pembe	B Inverted Channel
Z	Gray	Gri	Z Channel
Z'	Blue	Mavi	Z Inverted Channel
Shield	Black	Siyah	Shield

Encoder Part Number

FNC | 30 | E | 6 | 6 | 30V | 1000 | – | R2

Housing:
30 : 30mm

Flange Type:
E : End hollow shaft

Shaft diameter : 4, 6, 8
Other dimensions on request

Output Channels
1 : A
2 : AB
3 : ABZ
4 : AB+A' B'
6 : ABZ+A' B' Z'

Electrical Connections:

Cable
A2 : axial 2m, Total length 25 mm
R2 : radial Total length 35 mm

Connector:
CAM1204 CAM1607
CAM1205 CAM1614

PPR Options :
1 to- 1024 all PPR, - 360 - 500 - 512 - 720 - 1000 - 1024 - 1440 - 2000 - 2048 - 2500

Supply Voltage and output circuit :
5V : 5V in / out
245V : 5-30V in 5V out
30V : 5-30V in / out

FNC 40E Series

Features

- **Industry 40 mm size, 20mm diameter clamping flange**
- **Universal 40 mm encoders**
- **Robust Mechanical and Electrical Construction**
- **Protection to IP65**
- **Up to 4096 PPR max.**
- **<300 kHz frequency**

PPR Options :

1 to 1024 - 2048 - 4096

Technical data - electrical ratings

Voltage supply	4.75VDC to 30VDC 4.75VDC to 5.5VDC
Protection:	Output short circuit protection. Reverse polarity protection (except 5V version)
Consumption w/o load	≤60 mA (24 VDC)
Resolution (steps/turn)	1...2048
Reference signal	Zero pulse, width 90° 180°, 360° optional
Optoelectronic life time	100.000 (min)
Output frequency	>200 kHz
Output signals	90° shifted A and B, Z + inverted
Output circuit	Linedriver/RS422 Push-pull short-circuit proof NPN Open Collector
Interference immunity	DIN EN 61000-6-2
Emitted interference	DIN EN 61000-6-4
Approval	CE

Technical data - mechanical design

Dimensions (flange)	ø40 mm
Shaft loading	≤60 N axial ≤80 N radial
Protection DIN EN 60529	IP54, IP65
Operating speed	≤10000 rpm
Starting torque	≤0.020 Nm (IP 67)
Materials	Housing: Aluminium Flange: Aluminium Shaft : Stainless steel
Shaft diameter:	4, 5, 6, 8 mm (other diameters on request)
Bearings lifetime:	$2x10^9$ rev. at 100% of full rated shaft load (minimum)
Operating temperature	-20...+85 °C
Storage temperature	-30 °C up to +90 °C
Weight approx.	150 g

Accessories

Connectors and cables
CRM1204 M12 4 poles female connector or see page 160

Mounting coupling
SK240606 plastic or see page 158

Mounting accessories
YY RST Spring or see page 156-157

FNC 40E Series

Mechanical Dimensions

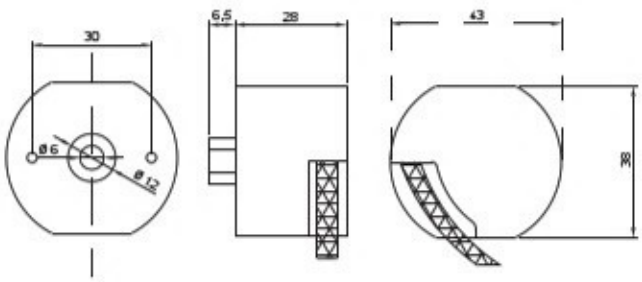

Pulse Diagram

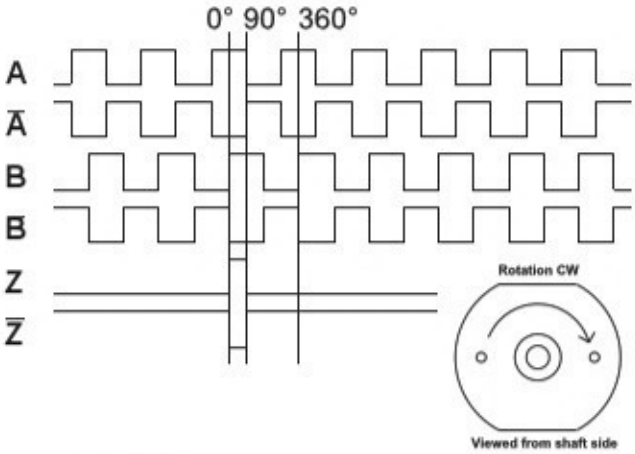

Connector Wiring

Connector Type	+Vcc	GND	A	A'	B	B'	Z	Z'	Shield
CRM1204	1	2	3		4				o.r.
CRM1205	1	2	3		4		5		o.r.
CRM1208	1	2	3	6	4	7	5	8	o.r.
CRM1212	1	2	3	6	4	7	5	8	o.r.
CRM1607	1	2	3		4		5		o.r.
CRM1614	Customer Specific								o.r.

For further information please see page 112

Cable Wiring

Function	Color	Renk	Explanation
+VB	Brown	Kahve	Supply Voltage
GND	White	Beyaz	Ground
A	Green	Yeşil	A Channel
A'	Red	Kırmızı	A Inverted Channel
B	Yellow	Sarı	B Channel
B'	Pink	Pembe	B Inverted Channel
Z	Gray	Gri	Z Channel
Z'	Blue	Mavi	Z Inverted Channel
Shield	Black	Siyah	Shield

Encoder Part Number

FNC | 40 | E | 6 | 6 | 30V | 1024 | – | R2

Housing:
40 : 40mm

Flange Type:
E : End shaft

Shaft diameter : 4, 5, 6, 8 mm
Other dimensions on request

Output Channels
1 : A
2 : AB
3 : ABZ
4 : AB+A' B'
6 : ABZ+A' B' Z'

Electrical Connections:

Cable
R2 : radial 2m, shield not connected (standart)
A2 : axial 2m, shield not connected (standart)

Connector:
CRM1204 CRM1212
CRM1205 CRM1607
CRM1208 CRM1614

PPR Options :
1 to 1024 - 2048 - 4096

Supply Voltage and output circuit :
5V : 5Vin / out
245V : 5-30Vin 5Vout
30V : 5-30Vin / out

FNC 50E Series

Features

- **Industry 50 mm standart size, semi hollow shaft**
- **Robust Mechanical and Electrical Construction**
- **Protection to IP65**
- **Up to 5000 PPR max.**
- **<300 kHz frequency**

PPR Options :

1 to 128 - 25 - 50 - 100 - 200 - 250 - 300 - 360 - 400 - 500 - 512 - 600 - 720 - 800 - 900 - 1000 - 1024 - 1250 - 1440 - 2000 - 2048 - 2500 - 3000 - 3600 - 4000 - 5000

Technical data - electrical ratings

Voltage supply	4.75VDC to 30VDC 4.75VDC to 5.5VDC
Protection:	Output short circuit protection. Reverse polarity protection (except 5V version)
Consumption w/o load	≤60 mA (24 VDC)
Resolution (steps/turn)	1...5000 up to 65536
Reference signal	Zero pulse, width 90° 180°, 360° optional
Optoelectronic life time	100.000 (min)
Output frequency	>200 kHz
Output signals	90° shifted A and B, Z + inverted
Output circuit	Linedriver/RS422 Push-pull short-circuit proof NPN Open Collector
Interference immunity	DIN EN 61000-6-2
Emitted interference	DIN EN 61000-6-4
Approval	CE

Technical data - mechanical design

Dimensions (flange)	ø50 mm
Shaft loading	≤80 N axial ≤100 N radial
Protection DIN EN 60529	IP54, IP65
Operating speed	≤10000 rpm
Starting torque	≤0.025 Nm (IP 67)
Materials	Housing: Aluminium Flange: Aluminium Shaft : Stainless steel
Shaft diameter:	6, 8, 10 mm (other diameters on request)
Bearings lifetime:	$2x10^9$ rev. at 100% of full rated shaft load (minimum)
Operating temperature	-20...+85 °C
Storage temperature	-30 °C up to +90 °C
Weight approx.	150 g

Accessories

Connectors and cables
See page 160

Mounting coupling
See page 158

Mounting accessories
YY AKR Spring or see page156-157

FNC 50E Series

Mechanical Dimensions

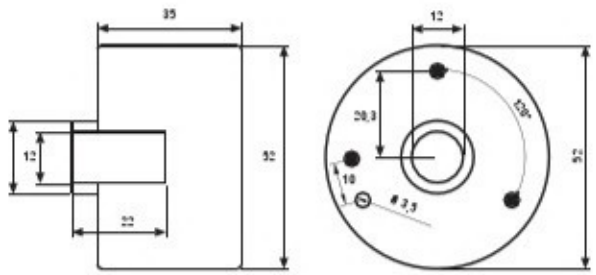

Pulse Diagram

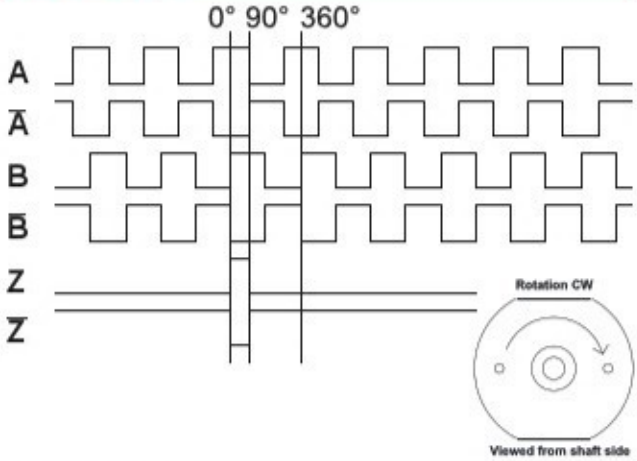

Connector Wiring

Connector Type	+Vcc	GND	A	A'	B	B'	Z	Z'	Shield
CRM1204	1	2	3		4				o.r.
CRM1205	1	2	3		4		5		o.r.
CRM1208	1	2	3	6	4	7	5	8	o.r.
CRM1212	1	2	3	6	4	7	5	8	o.r.
CRM1607	1	2	3		4		5		o.r.
CRM1614	Customer Specific								o.r.

For further information please see page 112

Cable Wiring

Function	Color	Renk	Explanation
+VB	Brown	Kahve	Supply Voltage
GND	White	Beyaz	Ground
A	Green	Yeşil	A Channel
A'	Red	Kırmızı	A Inverted Channel
B	Yellow	Sarı	B Channel
B'	Pink	Pembe	B Inverted Channel
Z	Gray	Gri	Z Channel
Z'	Blue	Mavi	Z Inverted Channel
Shield	Black	Siyah	Shield

Encoder Part Number

FNC | 50 | E | 10 | 6 | 30V | 1024 | - | R2

Housing:
50 : 50mm

Flange Type:
S : Servo flange
B : Clamping flange

Shaft diameter : 4, 6, 8, 10, 12, 14
Other dimensions on request

Output Channels
1 : A
2 : AB
3 : ABZ
4 : AB+A' B'
6 : ABZ+A' B' Z'

Electrical Connections:

Cable
R2 : radial 2m, shield not connected (standart)

Connector:
CRM1204 CRM1212
CRM1205 CRM1607
CRM1208 CRM1614

PPR Options :
1 to 128 - 25 - 50 - 100 - 200 - 250 - 300 - 360 - 400 - 500 - 512 - 600 - 720 - 800 - 900 - 1000 - 1024 - 1250 - 2000 - 2048 - 2500 - 3000 - 3600 - 4000 - 5000

Supply Voltage and output circuit :
5V : 5Vin / out
245V : 5-30Vin 5Vout
30V : 5-30Vin / out

FNC 58E Series, end hollow shaft

Features

- **Industry 58 mm standard size, end hollow shaft**
- **Robust mechanical and electrical construction**
- **Protection up to IP67**
- **Up to 25.000 PPR max.**
- **<300 kHz frequency**

PPR Options :

1 to 128 - 25 - 50 - 100 - 200 - 250 - 300 - 360 - 400 - 500 - 512 - 600 - 720 - 800 - 900 - 1000 - 1024 - 1250 - 1440 - 2000 - 2048 - 2500 - 3000 - 3600 - 4000 - 4096 - 5000 - 6000 - 8192 - 10000 - 12500 - 20000 - 25000

Technical data - electrical ratings

Voltage supply	4.75VDC to 30VDC 4.75VDC to 5.5VDC
Protection:	Output short circuit protection. Reverse polarity protection (except 5V version)
Consumption w/o load	≤60 mA (24 VDC)
Resolution (steps/turn)	1...25.000 up to 65536
Reference signal	Zero pulse, width 90° 180°, 360° optional
Optoelectronic life time	100.000 (min)
Output frequency	>200 kHz
Output signals	90° shifted A and B, Z + inverted
Output circuit	Linedriver/RS422 Push-pull short-circuit proof NPN Open Collector
Interference immunity	DIN EN 61000-6-2
Emitted interference	DIN EN 61000-6-4
Approval	CE

Technical data - mechanical design

Dimensions (flange)	ø58 mm
Shaft loading	≤120 N axial ≤160 N radial
Protection DIN EN 60529	IP54, IP65
Operating speed	≤10000 rpm
Starting torque	≤0.025 Nm (IP 67)
Materials	Housing: Aluminium Flange: Aluminium Shaft : Stainless steel
Shaft diameter:	6, 8, 10, 12, 14, 15, 16 mm (other diameters on request)
Bearings lifetime:	$2x10^9$ rev. at 100% of full rated shaft load (minimum)
Operating temperature	-20...+85 °C
Storage temperature	-30 °C up to +90 °C
Weight approx.	250 g

Accessories

Connectors and cables
CRM1204 M12 4 poles female connector or see page 160

Mounting coupling
SK240606 plastic or see page 158

Mounting accessories
YY RST Spring or see page 156-157

FNC 58E Series, end hollow shaft

Mechanical Dimensions

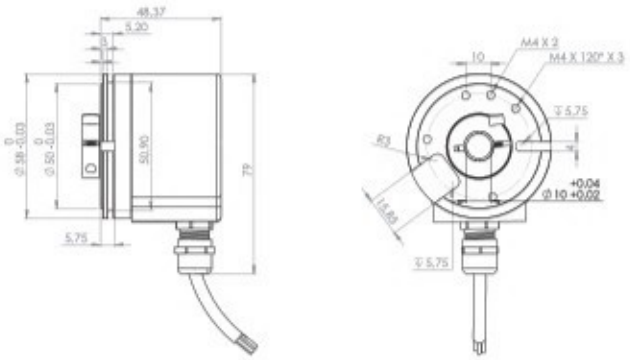

Pulse Diagram

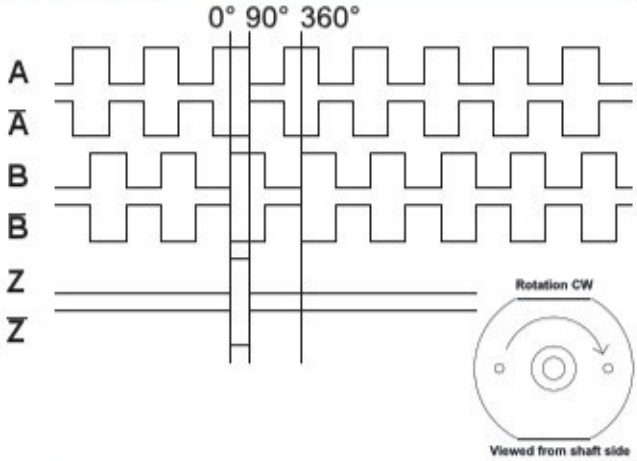

Connector Wiring

Connector Type	+Vcc	GND	A	A'	B	B'	Z	Z'	Shield
CRM1204	1	2	3		4				o.r.
CRM1205	1	2	3		4		5		o.r.
CRM1208	1	2	3	6	4	7	5	8	o.r.
CRM1212	1	2	3	6	4	7	5	8	o.r.
CRM1607	1	2	3		4		5		o.r.
CRM1614	Customer Specific								o.r.
CRM2312R	2-12	10-11	5	6	8	1	3	4	o.r.
CRM2312L	2-12	10-11	5	6	8	1	3	4	o.r.

For further information please see page 112

Cable Wiring

Function	Color	Renk	Explanation
+VB	Brown	Kahve	Supply Voltage
GND	White	Beyaz	Ground
A	Green	Yeşil	A Channel
A'	Red	Kırmızı	A Inverted Channel
B	Yellow	Sarı	B Channel
B'	Pink	Pembe	B Inverted Channel
Z	Gray	Gri	Z Channel
Z'	Blue	Mavi	Z Inverted Channel
Shield	Black	Siyah	Shield

Encoder Part Number

FNC | 58 | E | 8 | 6 | 30V | 1024 | – | R2

Housing:
58 : 58mm

Flange Type:
E : End hollow
H : Through hollow shaft

Shaft diameter : 4, 6, 8, 10, 12, 14, 15, 16
Other dimensions on request

Output Channels
1 : A
2 : AB
3 : ABZ
4 : AB+A' B'
6 : ABZ+A' B' Z'

Electrical Connections:

Cable
R2 : radial 2m, shield not connected (standart)

Connector:

CRM1204	CRM1607
CRM1205	CRM1614
CRM1208	CRM2312R
CRM1212	CRM2312L

PPR Options :
1 to 128 - 25 - 50 - 100 - 200 - 250 - 300 - 360 - 400 - 500 - 512 - 600 - 720 - 800 - 900 - 1000 - 1024 - 1250 - 1440 - 2000 - 2048 - 2500 - 3000 - 3600 - 4000 - 4096 - 5000 - 6000 - 8192 - 10000 - 12500 - 20000 - 25000

Supply Voltage and output circuit :
5V : 5Vin / out
245V : 5-30Vin 5Vout
30V : 5-30Vin / out

FNC 40H Series

Features

- **Industry 40 mm size, 20mm diameter clamping flange**
- **Universal 40 mm encoders**
- **Robust Mechanical and Electrical Construction**
- **Protection to IP65**
- **Up to 4096 PPR max.**
- **<300 kHz frequency**

PPR Options :

600-1200-2400-625-1250-2500
750-1500-3000-900-1800-3600-
1024-2048-4096

Technical data - electrical ratings

Voltage supply	4.75VDC to 30VDC 4.75VDC to 5.5VDC
Protection:	Output short circuit protection. Reverse polarity protection (except 5V version)
Consumption w/o load	≤60 mA (24 VDC)
Resolution (steps/turn)	up to 4096 ppr
Reference signal	Zero pulse, width 90° 180°, 360° optional
Optoelectronic life time	100.000 (min)
Output frequency	>200 kHz
Output signals	90° shifted A and B, Z + inverted
Output circuit	Linedriver/RS422 Push-pull short-circuit proof NPN Open Collector
Interference immunity	DIN EN 61000-6-2
Emitted interference	DIN EN 61000-6-4
Approval	CE

Technical data - mechanical design

Dimensions (flange)	ø40 mm
Shaft loading	≤60 N axial ≤80 N radial
Protection DIN EN 60529	IP54, IP65
Operating speed	≤10000 rpm
Starting torque	≤0.020 Nm (IP 67)
Materials	Housing: Aluminium Flange: Aluminium Shaft : Stainless steel
Shaft diameter:	4,6,8, 10 mm (other diameters on request)
Bearings lifetime:	$2x10^9$ rev. at 100% of full rated shaft load (minimum)
Operating temperature	-20...+85 °C
Storage temperature	-30 °C up to +90 °C
Weight approx.	100 g

Accessories

Connectors and cables
CRM1204 M12 4 poles female connector or see page 160

Mounting coupling
SK240606 plastic or see page 158

Mounting accessories
YY RST Spring or see page 156-157

FNC 40H Series

Mechanical Dimensions

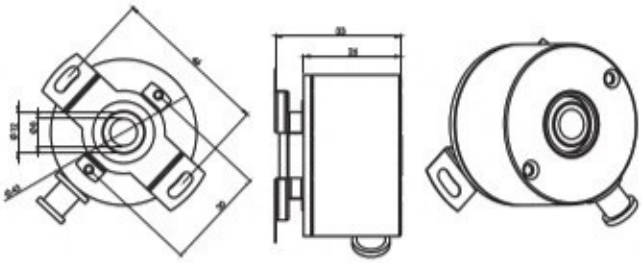

Pulse Diagram

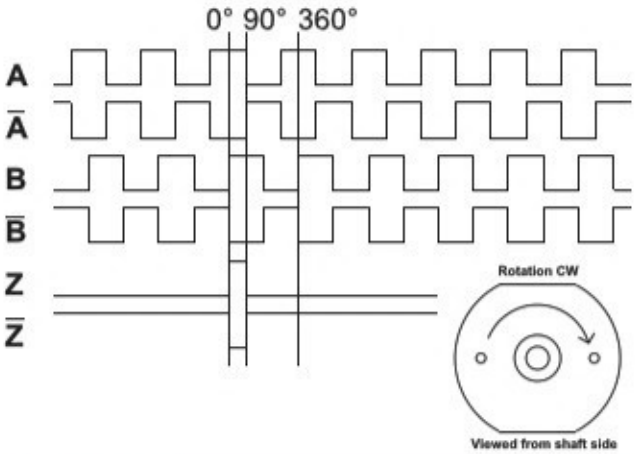

Connector Wiring

Connector Type	+Vcc	GND	A	A'	B	B'	Z	Z'	Shield
CRM1204	1	2	3		4				o.r.
CRM1205	1	2	3		4		5		o.r.
CRM1208	1	2	3	6	4	7	5	8	o.r.
CRM1212	1	2	3	6	4	7	5	8	o.r.
CRM1607	1	2	3		4		5		o.r.
CRM1614	Customer Specific								o.r.

For further information please see page 64

Cable Wiring

Function	Color	Renk	Explanation
+VB	Brown	Kahve	Supply Voltage
GND	White	Beyaz	Ground
A	Green	Yeşil	A Channel
A'	Red	Kırmızı	A Inverted Channel
B	Yellow	Sarı	B Channel
B'	Pink	Pembe	B Inverted Channel
Z	Gray	Gri	Z Channel
Z'	Blue	Mavi	Z Inverted Channel
Shield	Black	Siyah	Shield

Encoder Part Number

FNC | 40 | H | 6 | 6 | 30V | 1024 | – | R2

Housing:
40 : 40mm

Flange Type:
H: Hollow shaft

Shaft diameter: 4,6,8,10 mm
Other dimensions on request

Output Channels
1 : A
2 : AB
3 : ABZ
4 : AB+A' B'
6 : ABZ+A' B' Z'

Electrical Connections:

Cable
R2 : radial 2m, shield not connected (standart)
A2 : axial 2m, shield not connected (standart)

Connector:
CRM1204 CRM1212
CRM1205 CRM1607
CRM1208 CRM1614

PPR Options :
600-1200-2400-625-1250-2500
750-1500-3000-900-1800-3600-
1024-2048-4096

Supply Voltage and output circuit :
5V : 5V in / out
245V : 5-30V in 5V out
30V : 5-30V in / out

FNC 50H Series

Features

- **Industry 50 mm standart size, through hollow shaft**
- **Robust Mechanical and Electrical Construction**
- **Protection to IP65**
- **Up to 5000 PPR max.**
- **<300 kHz frequency**

PPR Options :

750 - 900 - 1000 - 1024 - 1250 - 1500 - 1800 - 2000 - 2048 - 2500 - 3000 - 3600 - 4000 - 4096 - 5000

Technical data - electrical ratings

Voltage supply	4.75VDC to 30VDC 4.75VDC to 5.5VDC
Protection:	Output short circuit protection. Reverse polarity protection (except 5V version)
Consumption w/o load	≤60 mA (24 VDC)
Resolution (steps/turn)	1...5000 up to 65536
Reference signal	Zero pulse, width 90° 180°, 360° optional
Optoelectronic life time	100.000 (min)
Output frequency	<300 kHz
Output signals	90° shifted A and B, Z + inverted
Output circuit	Linedriver/RS422 Push-pull short-circuit proof NPN Open Collector
Interference immunity	DIN EN 61000-6-2
Emitted interference	DIN EN 61000-6-4
Approval	CE

Technical data - mechanical design

Dimensions (flange)	ø50 mm
Shaft loading	≤80 N axial ≤100 N radial
Protection DIN EN 60529	IP54, IP65
Operating speed	≤10000 rpm
Starting torque	≤0.025 Nm (IP 67)
Materials	Housing: Aluminium Flange: Aluminium Shaft : Stainless steel
Shaft diameter:	6, 8, 10, 12, 14, 15 mm (other diameters on request)
Bearings lifetime:	$2x10^9$ rev. at 100% of full rated shaft load (minimum)
Operating temperature	-20...+85 °C
Storage temperature	-30 °C up to +90 °C
Weight approx.	150 g

Accessories

Connectors and cables
See page 160

Mounting coupling
See page 158

Mounting accessories
YY AKR Spring or see page156-157

FNC 50H Series

Mechanical Dimensions

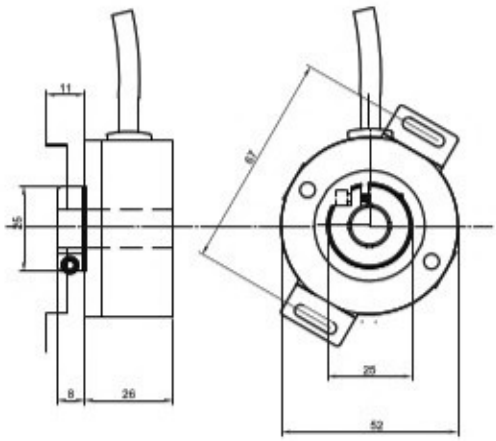

Pulse Diagram

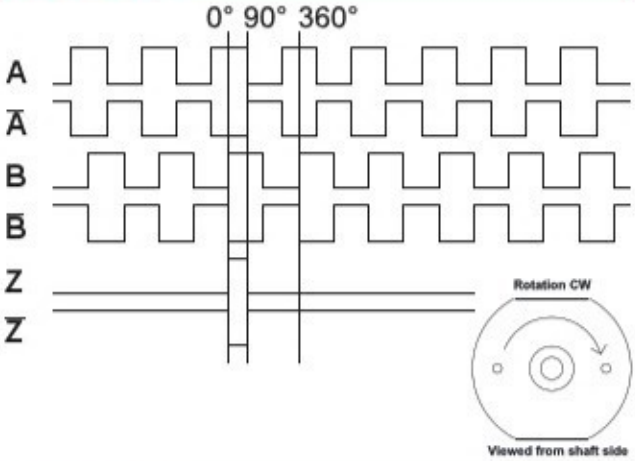

Connector Wiring

Connector Type	+Vcc	GND	A	A'	B	B'	Z	Z'	Shield
CRM1204	1	2	3		4				o.r.
CRM1205	1	2	3		4		5		o.r.
CRM1208	1	2	3	6	4	7	5	8	o.r.
CRM1212	1	2	3	6	4	7	5	8	o.r.
CRM1607	1	2	3		4		5		o.r.
CRM1614	Customer Specific								o.r.

For further information please see page 112

Cable Wiring

Function	Color	Renk	Explanation
+VB	Brown	Kahve	Supply Voltage
GND	White	Beyaz	Ground
A	Green	Yeşil	A Channel
A'	Red	Kırmızı	A Inverted Channel
B	Yellow	Sarı	B Channel
B'	Pink	Pembe	B Inverted Channel
Z	Gray	Gri	Z Channel
Z'	Blue	Mavi	Z Inverted Channel
Shield	Black	Siyah	Shield

Encoder Part Number

FNC | 50 | H | 10 | 6 | 30V | 1024 | – | R2

Housing:
50 : 50mm

Flange Type:
E : End hollow
H : Through hollow shaft

Shaft diameter : 6, 8, 10, 12, 14, 15 mm
Other dimensions on request

Output Channels
1 : A
2 : AB
3 : ABZ
4 : AB+A' B'
6 : ABZ+A' B' Z'

Electrical Connections:

Cable
R2 : radial 2m, shield not connected (standart)

Connector:
CRM1204 CRM1212
CRM1205 CRM1607
CRM1208 CRM1614

PPR Options :
750 - 900 - 1000 - 1024 - 1250 - 1500 - 1800 - 2000 - 2048 - 2500 - 3000 - 3600 - 4000 - 4096 - 5000

Supply Voltage and output circuit :
5V : 5Vin / out
245V : 5-30Vin 5Vout
30V : 5-30Vin / out

Incremental encoders

Resolution 1...5000 pulses

FNC 50HT Series

Thin version of FNC 50H

Features

- **Industry 50 mm standard size, through hollow shaft**
- **Robust Mechanical and Electrical Construction**
- **Protection to IP65**
- **Up to 5000 PPR max.**
- **<300 kHz frequency**
- **Double sided Bearings**

PPR Options :

750 - 900 - 1000 - 1024 - 1250 - 1500 - 1800 - 2000 - 2048 - 2500 - 3000 - 3600 - 4000 - 4096 - 5000

Technical data - electrical ratings

Voltage supply	4.75VDC to 30VDC 4.75VDC to 5.5VDC
Protection:	Output short circuit protection. Reverse polarity protection (except 5V version)
Consumption w/o load	≤60 mA (24 VDC)
Resolution (steps/turn)	1...5000
Reference signal	Zero pulse, width 90° 180°, 360° optional
Optoelectronic life time	100.000 (min)
Output frequency	<300 kHz
Output signals	90° shifted A and B, Z + inverted
Output circuit	Linedriver/RS422 Push-pull short-circuit proof NPN Open Collector
Interference immunity	DIN EN 61000-6-2
Emitted interference	DIN EN 61000-6-4
Approval	CE

Technical data - mechanical design

Dimensions (flange)	ø50 mm
Shaft loading	≤80 N axial ≤100 N radial
Protection DIN EN 60529	IP54, IP65
Operating speed	≤10000 rpm
Starting torque	≤0.025 Nm (IP 67)
Materials	Housing: Aluminium Flange: Aluminium Shaft : Stainless steel
Shaft diameter:	6, 8, 10, 12, 14, 15 mm (other diameters on request)
Bearings lifetime:	$2x10^9$ rev. at 100% of full rated shaft load (minimum)
Operating temperature	-20...+85 °C
Storage temperature	-30 °C up to +90 °C
Weight approx.	150 g

Accessories

Connectors and cables
See page 160

Mounting coupling
See page 158

Mounting accessories
YY AKR Spring or see page156-157

FNC 50HT Series

Mechanical Dimensions

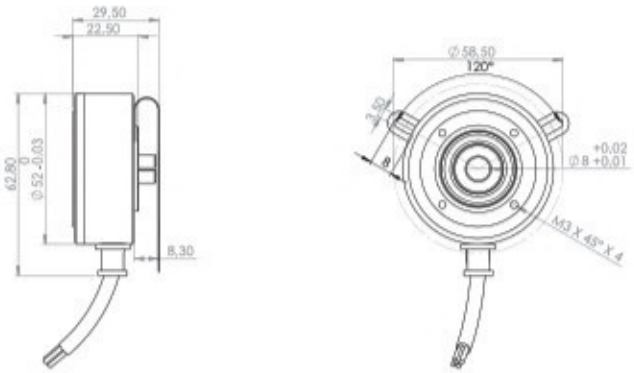

Pulse Diagram

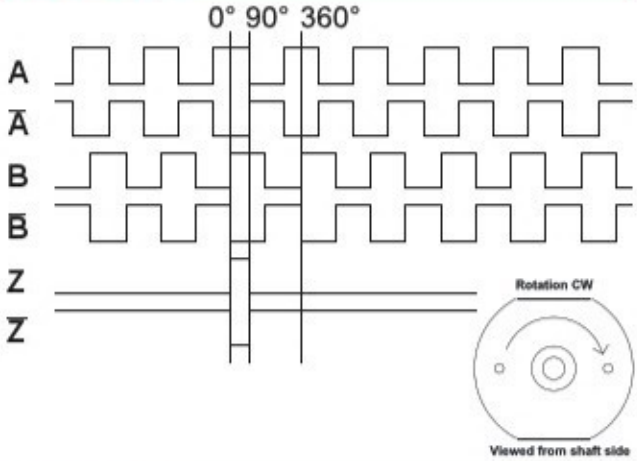

Connector Wiring

Connector Type	+Vcc	GND	A	A'	B	B'	Z	Z'	Shield
CRM1204	1	2	3		4				o.r.
CRM1205	1	2	3		4		5		o.r.
CRM1208	1	2	3	6	4	7	5	8	o.r.
CRM1212	1	2	3	6	4	7	5	8	o.r.
CRM1607	1	2	3		4		5		o.r.
CRM1614	Customer Specific								o.r.

For further information please see page 112

Cable Wiring

Function	Color	Renk	Explanation
+VB	Brown	Kahve	Supply Voltage
GND	White	Beyaz	Ground
A	Green	Yeşil	A Channel
A'	Red	Kırmızı	A Inverted Channel
B	Yellow	Sarı	B Channel
B'	Pink	Pembe	B Inverted Channel
Z	Gray	Gri	Z Channel
Z'	Blue	Mavi	Z Inverted Channel
Shield	Black	Siyah	Shield

Encoder Part Number

FNC | 50 | HT | 10 | 6 | 30V | 1024 | – | R2

Housing:
50 : 50mm

Flange Type:
HT : Thin versiyon of 50H

Shaft diameter : 6, 8, 10, 12, 14, 15 mm
Other dimensions on request

Output Channels
1 : A
2 : AB
3 : ABZ
4 : AB+A' B'
6 : ABZ+A' B' Z'

Electrical Connections:

Cable
R2 : radial 2m, shield not connected (standart)

Connector:
CRM1204 CRM1212
CRM1205 CRM1607
CRM1208 CRM1614

PPR Options :
750 - 900 - 1000 - 1024 - 1250 - 1500 - 1800 - 2000 - 2048 - 2500 - 3000 - 3600 - 4000 - 4096 - 5000

Supply Voltage and output circuit :
5V : 5Vin / out
245V : 5-30Vin 5Vout
30V : 5-30Vin / out

FNC 58H Series, through hollow shaft

Features

- **Industry 58 mm standard size, through hollow shaft**
- **Robust Mechanical and Electrical Construction**
- **Protection up to IP67**
- **Up to 25000 PPR max.**
- **<300 kHz frequency**

PPR Options :

1 to 128 - 25 - 50 - 100 - 200 - 250 - 300 - 360 - 400 - 500 - 512 - 600 - 720 - 800 - 900 - 1000 - 1024 - 1250 - 1440 - 2000 - 2048 - 2500 - 3000 - 3600 - 4000 - 4096 - 5000 - 6000 - 8192 - 10000 - 12500 - 20000 - 25000

Technical data - electrical ratings

Voltage supply	4.75VDC to 30VDC 4.75VDC to 5.5VDC
Protection:	Output short circuit protection. Reverse polarity protection (except 5V version)
Consumption w/o load	≤60 mA (24 VDC)
Resolution (steps/turn)	1...25.000 up to 65536
Reference signal	Zero pulse, width 90° 180°, 360° optional
Optoelectronic life time	100.000 (min)
Output frequency	>200 kHz
Output signals	90° shifted A and B, Z + inverted
Output circuit	Linedriver/RS422 Push-pull short-circuit proof NPN Open Collector
Interference immunity	DIN EN 61000-6-2
Emitted interference	DIN EN 61000-6-4
Approval	CE

Technical data - mechanical design

Dimensions (flange)	ø58 mm
Shaft loading	≤120 N axial ≤160 N radial
Protection DIN EN 60529	IP54, IP65
Operating speed	≤10000 rpm
Starting torque	≤0.025 Nm (IP 67)
Materials	Housing: Aluminium Flange: Aluminium Shaft : Stainless steel
Shaft diameter:	6, 8, 10, 12, 14 mm (other diameters on request)
Bearings lifetime:	$2x10^9$ rev. at 100% of full rated shaft load (minimum)
Operating temperature	-20...+85 °C
Storage temperature	-30 °C up to +90 °C
Weight approx.	350 g

Accessories

Connectors and cables
CRM1204 M12 4 poles female connector or see page 160

Mounting coupling
SK240606 plastic or see page 158

Mounting accessories
YY RST Spring or see page 156-157

FNC 58H Series, through hollow shaft

Mechanical Dimensions

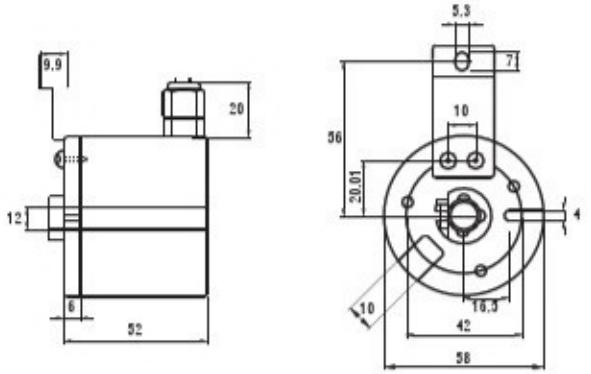

Pulse Diagram

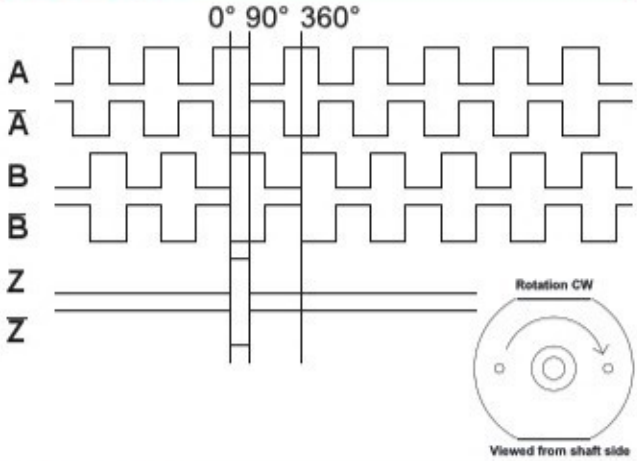

Connector Wiring

Connector Type	+Vcc	GND	A	A'	B	B'	Z	Z'	Shield
CRM1204	1	2	3		4				o.r.
CRM1205	1	2	3		4		5		o.r.
CRM1208	1	2	3	6	4	7	5	8	o.r.
CRM1212	1	2	3	6	4	7	5	8	o.r.
CRM1607	1	2	3		4		5		o.r.
CRM1614	Customer Specific								o.r.
CRM2312R	2-12	10-11	5	6	8	1	3	4	o.r.
CRM2312L	2-12	10-11	5	6	8	1	3	4	o.r.

For further information please see page 112

Cable Wiring

Function	Color	Renk	Explanation
+VB	Brown	Kahve	Supply Voltage
GND	White	Beyaz	Ground
A	Green	Yeşil	A Channel
A'	Red	Kırmızı	A Inverted Channel
B	Yellow	Sarı	B Channel
B'	Pink	Pembe	B Inverted Channel
Z	Gray	Gri	Z Channel
Z'	Blue	Mavi	Z Inverted Channel
Shield	Black	Siyah	Shield

Encoder Part Number

FNC | 58 | H | 8 | 6 | 30V | 1024 | – | R2

Housing:
58 : 58mm

Flange Type:
E : End hollow
H : Through hollow shaft

Shaft diameter : 6, 8, 10, 12, 14 mm
Other dimensions on request

Output Channels
1 : A
2 : AB
3 : ABZ
4 : AB+A' B'
6 : ABZ+A' B' Z'

Electrical Connections:

Cable
R2 : radial 2m, shield not connected (standart)

Connector:

CRM1204	CRM1607
CRM1205	CRM1614
CRM1208	CRM2312R
CRM1212	CRM2312L

PPR Options :

1 to 128 - 25 - 50 - 100 - 200 - 250 - 300 - 360 - 400 - 500 - 512 - 600 - 720 - 800 - 900 - 1000 - 1024 - 1250 - 1440 - 2000 - 2048 - 2500 - 3000 - 3600 - 4000 - 4096 - 5000 - 6000 - 8192 - 10000 - 12500 - 20000 - 25000

Supply Voltage and output circuit :

5V : 5Vin / out
245V : 5-30Vin 5Vout
30V : 5-30Vin / out

FNC 80H Series

Features

- **Industry 80 mm standard size, through hollow shaft**
- **Robust Mechanical and Electrical Construction**
- **Protection up to IP67**
- **Up to 2500 PPR max.**
- **<300 kHz frequency**

PPR Options :

1000 - 1024 - 1200 - 1250 - 2000 - 2048 - 2500

Technical data - electrical ratings

Voltage supply	4.75VDC to 30VDC 4.75VDC to 5.5VDC
Protection:	Output short circuit protection. Reverse polarity protection (except 5V version)
Consumption w/o load	≤60 mA (24 VDC)
Resolution (steps/turn)	1...25.000
Reference signal	Zero pulse, width 90° 180°, 360° optional
Optoelectronic life time	100.000 (min)
Output frequency	>200 kHz
Output signals	90° shifted A and B, Z + inverted
Output circuit	Linedriver/RS422 Push-pull short-circuit proof NPN Open Collector
Interference immunity	DIN EN 61000-6-2
Emitted interference	DIN EN 61000-6-4
Approval	CE

Technical data - mechanical design

Dimensions (flange)	ø80 mm
Shaft loading	≤120 N axial ≤160 N radial
Protection DIN EN 60529	IP54, IP65
Operating speed	≤10000 rpm
Starting torque	≤0.025 Nm (IP 67)
Materials	Housing: Aluminium Flange: Aluminium Shaft : Stainless steel
Shaft diameter:	10, 12, 14, 15, 16, 17, 18, 19, 20, 22, 24, 25 mm
Bearings lifetime:	$2x10^9$ rev. at 100% of full rated shaft load (minimum)
Operating temperature	-20...+85 °C
Storage temperature	-30 °C up to +90 °C
Weight approx.	250 g

Accessories

Connectors and cables
CRM1204 M12 4 poles female connector or see page 160

Mounting coupling
SK240606 plastic or see page 158

Mounting accessories
YY RST Spring or see page 156-157

FNC 80H Series

Mechanical Dimensions

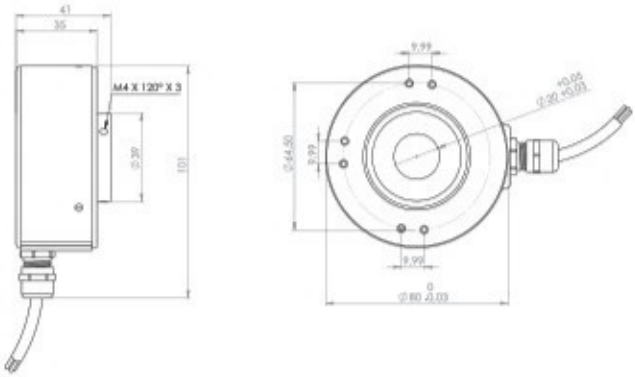

Pulse Diagram

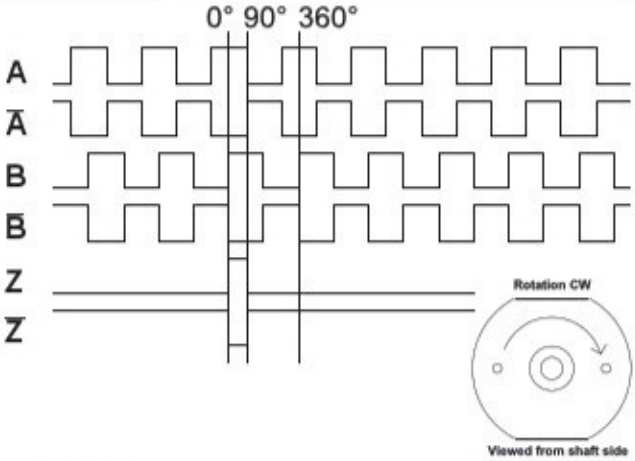

Connector Wiring

Connector Type	+Vcc	GND	A	A'	B	B'	Z	Z'	Shield
CRM1204	1	2	3		4				o.r.
CRM1205	1	2	3		4		5		o.r.
CRM1208	1	2	3	6	4	7	5	8	o.r.
CRM1212	1	2	3	6	4	7	5	8	o.r.
CRM1607	1	2	3		4		5		o.r.
CRM1614	Customer Specific								o.r.
CRM2312R	2-12	10-11	5	6	8	1	3	4	o.r.
CRM2312L	2-12	10-11	5	6	8	1	3	4	o.r.

For further information please see page 112

Cable Wiring

Function	Color	Renk	Explanation
+VB	Brown	Kahve	Supply Voltage
GND	White	Beyaz	Ground
A	Green	Yeşil	A Channel
A'	Red	Kırmızı	A Inverted Channel
B	Yellow	Sarı	B Channel
B'	Pink	Pembe	B Inverted Channel
Z	Gray	Gri	Z Channel
Z'	Blue	Mavi	Z Inverted Channel
Shield	Black	Siyah	Shield

Encoder Part Number

FNC | 80 | H | 25 | 6 | 30V | 1024 | — | R2

Housing:
80 : 80mm

Flange Type:
E : End hollow
H : Through hollow shaft

Shaft diameter : 10, 12, 14, 15, 16, 17, 18, 19, 20, 22, 24, 25
Other dimensions on request

Output Channels
1 : A
2 : AB
3 : ABZ
4 : AB+A' B'
6 : ABZ+A' B' Z'

Electrical Connections:

Cable
R2 : radial 2m, shield not connected (standart)

Connector:

CRM1204	CRM1607
CRM1205	CRM1614
CRM1208	CRM2312R
CRM1212	CRM2312L

PPR Options :
1000 - 1024 - 1200 - 1250 - 2000 - 2048 - 2500

Supply Voltage and output circuit :
5V : 5Vin / out
245V : 5-30Vin 5Vout
30V : 5-30Vin / out

FNC F82 Series

Features

- **Special 80 mm design, through hollow shaft**
- **Robust mechanical and electrical construction**
- **Protection up to IP67**
- **Up to 8192 PPR max.**
- **<300 kHz frequency**

PPR Options :

1024 - 2000 - 2048 - 4000 - 4096 - 8000 - 8192

Technical data - electrical ratings

Voltage supply	4.75VDC to 30VDC 4.75VDC to 5.5VDC
Protection:	Output short circuit protection. Reverse polarity protection (except 5V version)
Consumption w/o load	≤60 mA (24 VDC)
Resolution (steps/turn)	1024...8192
Reference signal	Zero pulse, width 90° 180°, 360° optional
Optoelectronic life time	100.000 (min)
Output frequency	<300 kHz
Output signals	90° shifted A and B, Z + inverted
Output circuit	Linedriver/RS422 Push-pull short-circuit proof NPN Open Collector
Interference immunity	DIN EN 61000-6-2
Emitted interference	DIN EN 61000-6-4
Approval	CE

Technical data - mechanical design

Dimensions (flange)	ø80 mm
Shaft loading	≤140 N axial ≤240 N radial
Protection DIN EN 60529	IP54, IP65
Operating speed	≤10000 rpm
Starting torque	≤0.025 Nm (IP 67)
Materials	Housing: Stainless steel Flange: Stainless steel Shaft : Stainless steel
Shaft diameter:	38, 40, 42, 44 mm (other diameters on request)
Bearings lifetime:	$2x10^9$ rev. at 100% of full rated shaft load (minimum)
Operating temperature	-20...+85 °C
Storage temperature	-30 °C up to +90 °C
Weight approx.	300 g

Accessories

Connectors and cables
CRM1204 M12 4 poles female connector or see page 160

Mounting coupling
SK240606 plastic or see page 158

Mounting accessories
YY RST Spring or see page 156-157

FNC F82 Series

Mechanical Dimensions

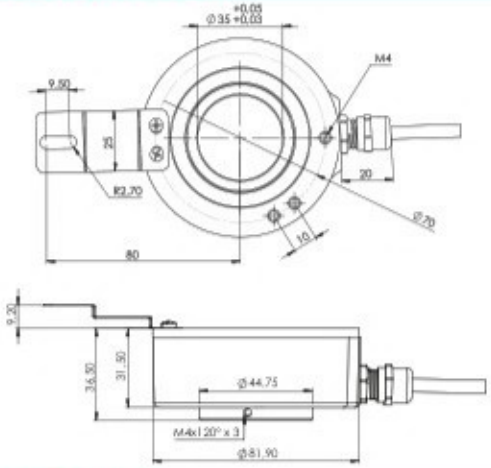

Pulse Diagram

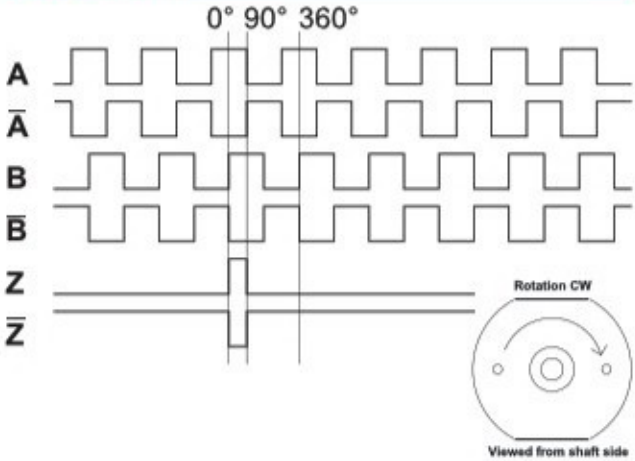

Connector Wiring

Connector Type	+Vcc	GND	A	A'	B	B'	Z	Z'	Shield
CRM1204	1	2	3		4				o.r.
CRM1205	1	2	3		4		5		o.r.
CRM1208	1	2	3	6	4	7	5	8	o.r.
CRM1212	1	2	3	6	4	7	5	8	o.r.
CRM1607	1	2	3		4		5		o.r.
CRM1614	Customer Specific								o.r.
CRM2312R	2-12	10-11	5	6	8	1	3	4	o.r.
CRM2312L	2-12	10-11	5	6	8	1	3	4	o.r.

For further information please see page 64

Cable Wiring

Function	Color	Renk	Explanation
+VB	Brown	Kahve	Supply Voltage
GND	White	Beyaz	Ground
A	Green	Yeşil	A Channel
A'	Red	Kırmızı	A Inverted Channel
B	Yellow	Sarı	B Channel
B'	Pink	Pembe	B Inverted Channel
Z	Gray	Gri	Z Channel
Z'	Blue	Mavi	Z Inverted Channel
Shield	Black	Siyah	Shield

Encoder Part Number

FNC F82 44 6 30V 1024 – R7

F82 Series

Shaft diameter : 38, 40, 42, 44
Other dimensions on request

Output Channels
1 : A
2 : AB
3 : ABZ
4 : AB+A' B'
6 : ABZ+A' B' Z'

Electrical Connections:

Cable
R7 : radial 7m, shield not connected (standart)

Connector:

CRM1204	CRM1607
CRM1205	CRM1614
CRM1208	CRM2312R
CRM1212	CRM2312L

PPR Options :
1024 - 2000 - 2048 - 4000 - 4096 - 8000 - 8192

Supply Voltage and output circuit :
5V : 5V in / out
245V : 5-30V in 5V out
30V : 5-30V in / out

FNC 100H Series

Features

- **Industry 100 mm design, through hollow shaft**
- **Robust mechanical and electrical construction**
- **Protection up to IP67**
- **Up to 10.000 PPR max.**
- **<300 kHz frequency**

PPR Options :

1024 - 2000 - 2048 - 2500 - 4000 - 4096 - 5000 - 8000 - 8192 - 10000

Technical data - electrical ratings

Voltage supply	4.75VDC to 30VDC 4.75VDC to 5.5VDC
Protection:	Output short circuit protection. Reverse polarity protection (except 5V version)
Consumption w/o load	≤60 mA (24 VDC)
Resolution (steps/turn)	1024...10.000
Reference signal	Zero pulse, width 90° 180°, 360° optional
Optoelectronic life time	100.000 (min)
Output frequency	<300 kHz
Output signals	90° shifted A and B, Z + inverted
Output circuit	Linedriver/RS422 Push-pull short-circuit proof NPN Open Collector
Interference immunity	DIN EN 61000-6-2
Emitted interference	DIN EN 61000-6-4
Approval	CE

Technical data - mechanical design

Dimensions (flange)	ø100 mm
Shaft loading	≤140 N axial ≤240 N radial
Protection DIN EN 60529	IP54, IP65
Operating speed	≤10.000 rpm
Starting torque	≤0.025 Nm (IP 67)
Materials	Housing: aluminium Flange: aluminium Shaft : stainless steel
Shaft diameter:	26, 28, 30, 32, 38 ,40 ,42 mm (other diameters on request)
Bearings lifetime:	$2x10^9$ rev. at 100% of full rated shaft load (minimum)
Operating temperature	-20...+85 °C
Storage temperature	-30 °C up to +90 °C
Weight approx.	700 g

Accessories

Connectors and cables
CRM1204 M12 4 poles female connector or see page 160

Mounting coupling
SK240606 plastic or see page 158

Mounting accessories
YY RST Spring or see page 156-157

FNC 100H Series

Mechanical Dimensions

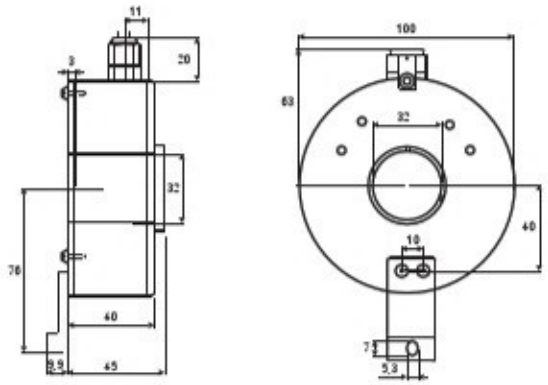

Pulse Diagram

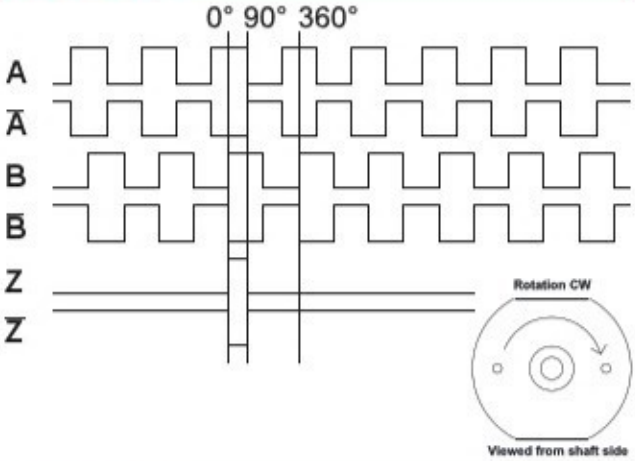

Connector Wiring

Connector Type	+Vcc	GND	A	A'	B	B'	Z	Z'	Shield
CRM1204	1	2	3		4				o.r.
CRM1205	1	2	3		4		5		o.r.
CRM1208	1	2	3	6	4	7	5	8	o.r.
CRM1212	1	2	3	6	4	7	5	8	o.r.
CRM1607	1	2	3		4		5		o.r.
CRM1614	Customer Specific								o.r.
CRM2312R	2-12	10-11	5	6	8	1	3	4	o.r.
CRM2312L	2-12	10-11	5	6	8	1	3	4	o.r.

For further information please see page 112

Cable Wiring

Function	Color	Renk	Explanation
+VB	Brown	Kahve	Supply Voltage
GND	White	Beyaz	Ground
A	Green	Yeşil	A Channel
A'	Red	Kırmızı	A Inverted Channel
B	Yellow	Sarı	B Channel
B'	Pink	Pembe	B Inverted Channel
Z	Gray	Gri	Z Channel
Z'	Blue	Mavi	Z Inverted Channel
Shield	Black	Siyah	Shield

Encoder Part Number

FNC | 100 | H | 38 | 6 | 30V | 1024 | — | R2

Housing:
100 : 100mm

Flange Type:
H : Through hollow shaft

Shaft diameter : 26, 28, 30, 32, 38 ,40 ,42
Other dimensions on request

Output Channels
1 : A
2 : AB
3 : ABZ
4 : AB+A' B'
6 : ABZ+A' B' Z'

Electrical Connections:
Cable
R2 : radial 2m, shield not connected (standart)

Connector:
CRM1204 CRM1607
CRM1205 CRM1614
CRM1208 CRM2312R
CRM1212 CRM2312L

PPR Options :
1024 - 2000 - 2048 - 2500 - 4000 - 4096 - 5000 - 8000 - 8192 - 10000

Supply Voltage and output circuit :
5V : 5Vin / out
245V : 5-30Vin 5Vout
30V : 5-30Vin / out

FENAC
www.fenac.com.tr

FENAC
Automation Control

Programmable encoders

- **Flexible**
- **Compact**

Motion Control Products

Programmable Resolution 1...65.536 pulses

FNC 58 Series Programmable

Features

- **Industry 58 mm standart size,**
- **Clamping- servo- end hollow shaft flange versions**
- **Robust mechanical and electrical construction**
- **Protection up to IP67**
- **Up to 65.536 PPR max.**
- **≤2 MHz frequency**
- **Programming via FNC PT - PC Programming tool**
- **FNC PT - PS easy programming software**

PPR Options :

1 to 65.536 programmable PPR

Technical data - electrical ratings

Voltage supply	4.75VDC to 30VDC 4.75VDC to 5.5VDC
Protection	Output short circuit protection. Reverse polarity protection Over voltage protection (except 5V version)
Consumption w/o load	≤60 mA (5 VDC) ≤35 mA (12 VDC) ≤26 mA (24 VDC) ≤27 mA (30 VDC)
Resolution (steps/turn)	1...65.536
Reference signal	Programmable length, 90° 180°, 270 , 360°
Output frequency	≤2 MHz
Output signals	90° shifted A and B, Z + all channels can be set indepently inverted
Output circuit	Linedriver/RS422 Push-pull short-circuit proof
Interference immunity	DIN EN 61000-6-2
Emitted interference	DIN EN 61000-6-4
Approval	CE

Technical data - mechanical design

Dimensions (flange)	ø58 mm
Shaft loading	≤140 N axial ≤240 N radial
Protection DIN EN 60529	IP54, IP65
Operating speed	≤12000 rpm
Starting torque	≤0.025 Nm (IP 67)
Materials	Housing: Aluminium Flange: Aluminium Shaft : Stainless steel
Shaft diameter	6, 8, 10, 12 mm (other diameters on request)
Bearings lifetime	$2x10^9$rev. at 100% of full rated shaft load (minimum)
Operating temperature	-20...+85 °C
Storage temperature	-30 °C up to +90 °C
Weight approx	250 g

Accessories

Connectors and cables
CRM1204 M12 4 poles female connector or see page 160

Mounting coupling
SK240606 plastic or see page 158

Mounting accessories
YY RST Spring or see page 156-157

FNC 58 Series Programmable

Mechanical Dimensions

58B

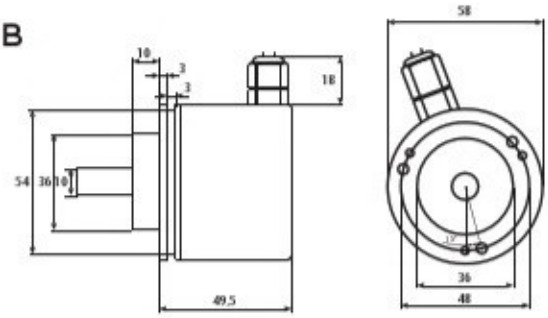

58S

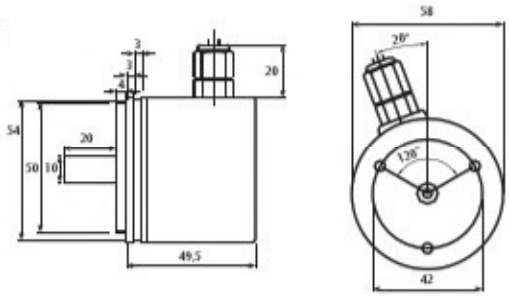

58E

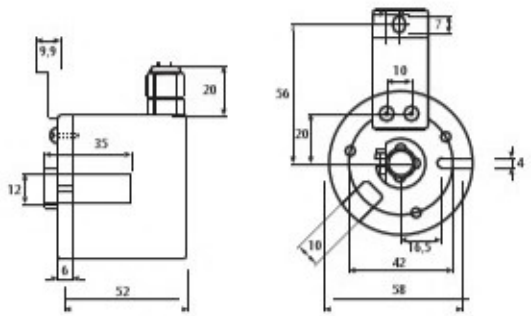

Pulse Diagram

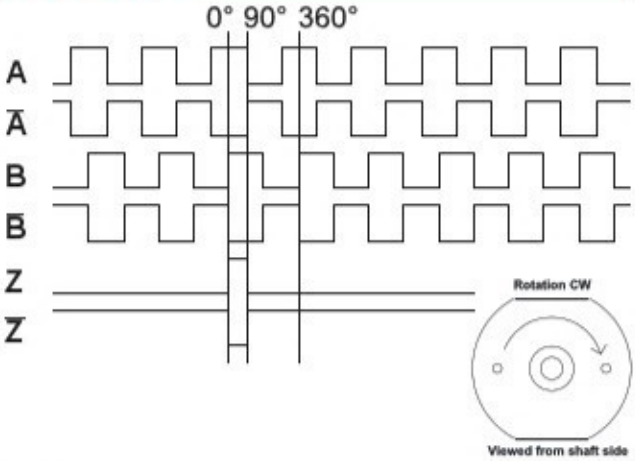

Cable Wiring

Function	Color	Renk	Explanation
+VB	Brown-Green	Kahve-Yeşil	Vcc
GND	White-Green	Beyaz-Yeşil	GND
A	Green	Yeşil	A
A'	Green-Black	Yeşil-Siyah	A Inverse
B	Yellow	Sarı	B
B'	Yellow-Black	Sarı- Siyah	B Inverse
Z	Gray	Gri	Z
Z'	Gray-Black	Gri-Siyah	Z Inverse
C	Blue	Mavi	Clock
D	Orange	Turuncu	Data
Shield	Black	Siyah	Shield

Encoder Part Number

FNCP | 58 | B | 10 | 6 | 30V | X | – | R2

Housing:
58 : 58mm

Flange Type:
S : Servo flange
B : Clamping flange
E : End hollow shaft

Shaft diameter : 4, 6, 8, 10, 12, 14
Other dimensions on request

Output Channels
3 : ABZ
4 : AB+A' B'
6 : ABZ+A' B' Z'

Electrical Connections:

Cable
R2 : radial 2m, shield not connected (standart)
A2 : axial 2m, shield not connected (standart)

Connector:

CRM1204	CRM1607	CRM1208	CRM2312R
CRM1205	CRM1614	CRM1212	CRM2312L

PPR Options :
1 to 65.536 Programmable

Supply Voltage and output circuit :
5V : 5Vin / out
245V : 5-30Vin 5Vout
30V : 5-30Vin / out

Warranty Seal
FENAC

FENAC Automation Control

Heavy duty encoders

- Heavy
- Reliable
- Robust

Motion Control Products

Incremental encoders
up to IP69K

Resolution 1...65.536 pulses

FNC 58BP Stainless Steel

Stainless Steel

Features

- **Industry 58 mm standard size, clamping flange**
- **Stainless Steel**
- **Robust mechanical and electrical construction**
- **Protection up to IP69K**
- **Up to 65.536 PPR max.**
- **<300 kHz frequency**
- **Optical or magnetic system**

PPR Options :

1 to 65.536 PPR Any PPR option

Technical data - electrical ratings

Voltage supply	4.75VDC to 30VDC 4.75VDC to 5.5VDC
Protection	Output short circuit protection. Reverse polarity protection (except 5V version)
Consumption w/o load	≤60 mA (24 VDC)
Resolution (steps/turn)	1...65.536
Reference signal	Zero pulse, width 90° 180°, 360° optional
Optoelectronic life time	100.000 (min)
Output frequency	>200 kHz
Output signals	90° shifted A and B, Z + inverted
Output circuit	Linedriver/RS422 Push-pull short-circuit proof
Interference immunity	DIN EN 61000-6-2
Emitted interference	DIN EN 61000-6-4
Approval	CE

Technical data - mechanical design

Dimensions (flange)	ø58 mm
Shaft loading	≤140 N axial ≤240 N radial
Protection DIN EN 60529	IP54, IP65
Operating speed	≤10000 rpm
Starting torque	≤0.025 Nm (IP 67)
Materials	Housing: Stainless steel Flange: Stainless steel Shaft : Stainless steel
Shaft diameter:	6, 8, 10, 12 mm (other diameters on request)
Bearings lifetime:	$2x10^9$ rev. at 100% of full rated shaft load (minimum)
Operating temperature	-20...+85 °C
Storage temperature	-30 °C up to +90 °C
Weight approx.	500 g

Accessories

Connectors and cables
CRM1204 M12 4 poles female connector or see page 160

Mounting coupling
SK240606 plastic or see page 158

Mounting accessories
YY RST Spring or see page 156-157

FNC 58BP Stainless Steel

Mechanical Dimensions

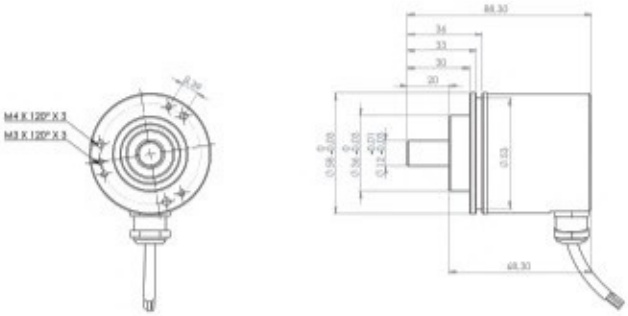

Pulse Diagram

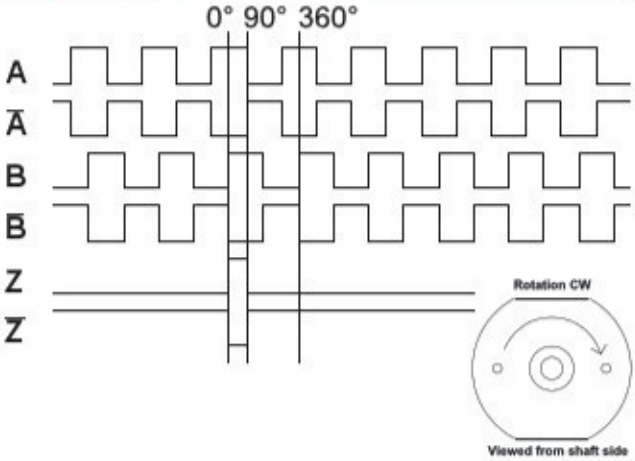

Connector Wiring

Connector Type	+Vcc	GND	A	A'	B	B'	Z	Z'	Shield
CRM1204	1	2	3		4				o.r.
CRM1205	1	2	3		4		5		o.r.
CRM1208	1	2	3	6	4	7	5	8	o.r.
CRM1212	1	2	3	6	4	7	5	8	o.r.
CRM1607	1	2	3		4		5		o.r.
CRM1614	Customer Specific								o.r.
CRM2312R	2-12	10-11	5	6	8	1	3	4	o.r.
CRM2312L	2-12	10-11	5	6	8	1	3	4	o.r.

For further information please see page 112

Cable Wiring

Function	Color	Renk	Explanation
+VB	Brown	Kahve	Supply Voltage
GND	White	Beyaz	Ground
A	Green	Yeşil	A Channel
A'	Red	Kırmızı	A Inverted Channel
B	Yellow	Sarı	B Channel
B'	Pink	Pembe	B Inverted Channel
Z	Gray	Gri	Z Channel
Z'	Blue	Mavi	Z Inverted Channel
Shield	Black	Siyah	Shield

Encoder Part Number

FNC | 58 | BP | 8 | 6 | 30V | 1024 | – | R2

Housing:
58 : 58mm

Flange Type:
B : Clamping flange

Shaft diameter : 8, 10, 12, 14
Other dimensions on request

Output Channels
1 : A
2 : AB
3 : ABZ
4 : AB+A' B'
6 : ABZ+A' B' Z'

Electrical Connections:

Cable
R2 : radial 2m, shield not connected (standart)
A2 : axial 2m, shield not connected (standart)

Connector:

CRM1204	CRM1607
CRM1205	CRM1614
CRM1208	CRM2312R
CRM1212	CRM2312L

PPR Options :
1 to 128 - 25 - 50 - 100 - 200 - 250 - 300 - 360 - 400 - 500 - 512 - 600 - 720 - 800 - 900 - 1000 - 1024 - 1250 - 1440 - 2000 - 2048 - 2500 - 3000 - 3600 - 4000 - 4096 - 5000 - 6000 - 8192 - 10000 - 12500 - 16384 - 20000 - 25000

Supply Voltage and output circuit :
5V : 5Vin / out
245V : 5-30Vin 5Vout
30V : 5-30Vin / out

Heavy Duty Series

End hollow shaft ø12...16 mm, cone shaft ø17 mm
1000...10000 pulses per revolution

FHD H100

with redundant option

Features

- **Robust, compact housing**
- **Two bearings with large distance**
- **High shaft load up to 400 N**
- **Highest operating speed 10000 rpm**
- **Terminal box, M23 connector, Cable options**

Technical data - electrical ratings

Voltage supply	9...30 VDC 5 VDC ±5 %
Consumption w/o load	≤100 mA
Pulses per revolution	1000...10000
Phase shift	90° ±15°
Scan ratio	45...55 %
Reference signal	Zero pulse, width 90°
Sensing method	Optical
Output frequency	≤200 kHz
Output signals	A, B, Z + inverted
Output stages	push-pull TTL/RS422
Shaft insulation	2.8 kV
Transmission length	≤400m at 100kHz
Interference immunity	EN 61000-6-2
Emitted interference	EN 61000-6-3
Approvals	CE

Technical data - mechanical design

Size (flange)	ø100mm
Shaft type	ø12...16 mm (blind hollow shaft) ø17 mm (cone shaft 1:10)
Shaft loading	≤300 N axial ≤400 N radial
Motor shaft tolerance	0.2 mm radial
Protection DIN EN 60529	IP 66
Operating speed	≤10000 rpm (mechanical)
Operating torque	≤6 Ncm
Rotor moment of inertia	160 gcm²
Materials	Housing: coated aluminium Shaft: stainless steel
Operating temperature	-40...+100 °C -40...+90 °C
Connection	Terminal box Flange connector M23, 12-pin Cable 1 m
Weight approx.	1.1 kg

Heavy Duty Series

End hollow shaft ø12...16 mm, cone shaft ø17 mm
1000...10000 pulses per revolution

FHD H100

Output signals

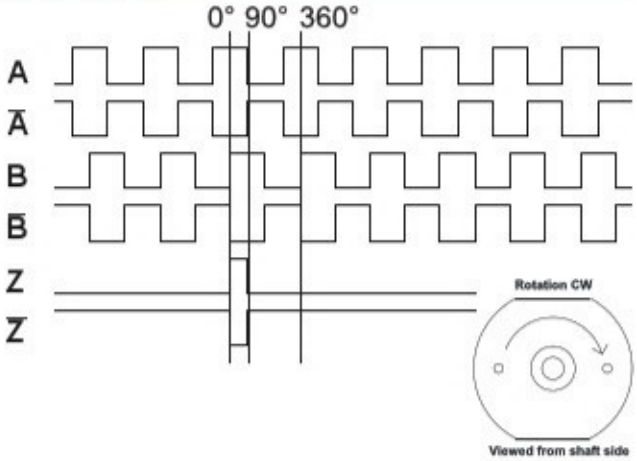

Terminal assignment

FHD H100
Connecting terminal terminal box

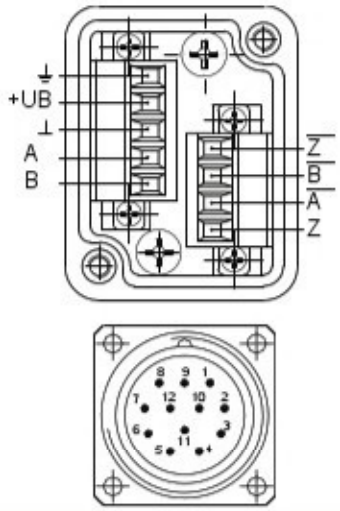

FHD H100
Flange connector
M23, 12-pin, male, CW

Pin	Assignment
1	$\overline{B}$
2	nc
3	Z
4	$\overline{Z}$
5	A
6	$\overline{A}$
7	nc
8	B
9, 10	nc
11	GND
12	+UB

Mechanical Dimensions

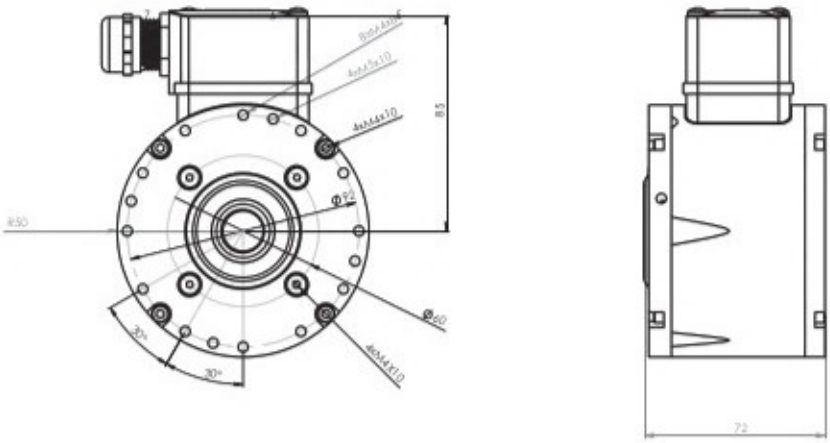

Encoder Part Number

FHD	HR	100	6	DN	30V	1024	–	T

H : Hollow shaft
HR : Hollow shaft redundant

Flange : 100mm

Shaft Diamater
10 : Blind hollow shaft ø10mm
12 : Blind hollow shaft ø12mm
16 : Blind hollow shaft ø16mm
17 : C17 conic shaft ø17mm

DN: ABZ+ Inverted

Electrical Connections:
T : Terminal box
M : M23 12L pin connector
C : Cable
R : Redundant Dsub Connection

PPR Options :
1000 - 1024 - 2000 - 2048 - 2500 - 4096 - 5000 - 8092 - 10000

Supply Voltage and output circuit :
5V : 5Vin / out
245V : 5-30Vin 5Vout
30V : 5-30Vin / out

Heavy Duty Series

Solid shaft with EURO flange B10
1000...10000 pulses per revolution

FHD S115

with redundant option

Features

- **Robust, compact housing**
- **Two bearings with large distance**
- **High shaft load up to 300 N**
- **Highest operating speed 10000 rpm**
- **Terminal box, M23 connector, Cable options**

Technical data - electrical ratings

Voltage supply	9...30 VDC 5 VDC ±5 %
Consumption w/o load	≤100 mA
Pulses per revolution	1000...10000
Phase shift	90° ±15°
Scan ratio	45...55 %
Reference signal	Zero pulse, width 90°
Sensing method	Optical
Output frequency	≤200 kHz
Output signals	A, B, Z + inverted
Output stages	push-pull TTL/RS422
Shaft insulation	By plastic coupling
Transmission length	≤400m at 100kHz
Interference immunity	EN 61000-6-2
Emitted interference	EN 61000-6-3
Approvals	CE

Technical data - mechanical design

Size (flange)	B10 flange//115 mm
Shaft type	ø11mm solid shaft
Shaft loading	≤240 N axial ≤300 N radial
Protection DIN EN 60529	IP 66
Operating speed	≤10000 rpm (mechanical)
Operating torque	≤4 Ncm
Rotor moment of inertia	160 gcm²
Materials	Housing: die-cast aluminium Shaft: stainless steel
Operating temperature	-40...+100 °C -40...+90 °C
Connection	Terminal box Flange connector M23, 12-pin Cable 1 m
Weight approx.	1.2 kg

Heavy Duty Series

Solid shaft with EURO flange B10
1000...10000 pulses per revolution

FHD S115

Output signals

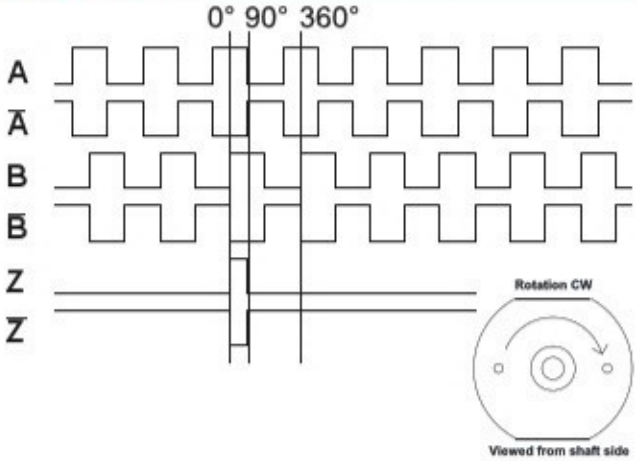

Terminal assignment

FHD S115
Connecting terminal terminal box

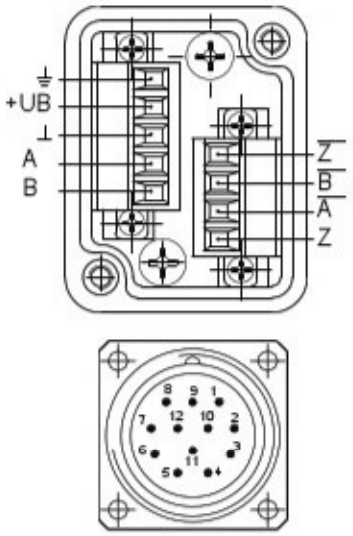

FHD S115
Flange connector
M23, 12-pin

Pin	Assignment
1	$\overline{B}$
2	nc
3	Z
4	$\overline{Z}$
5	A
6	$\overline{A}$
7	nc
8	B
9, 10	nc
11	GND
12	+UB

Mechanical Dimensions

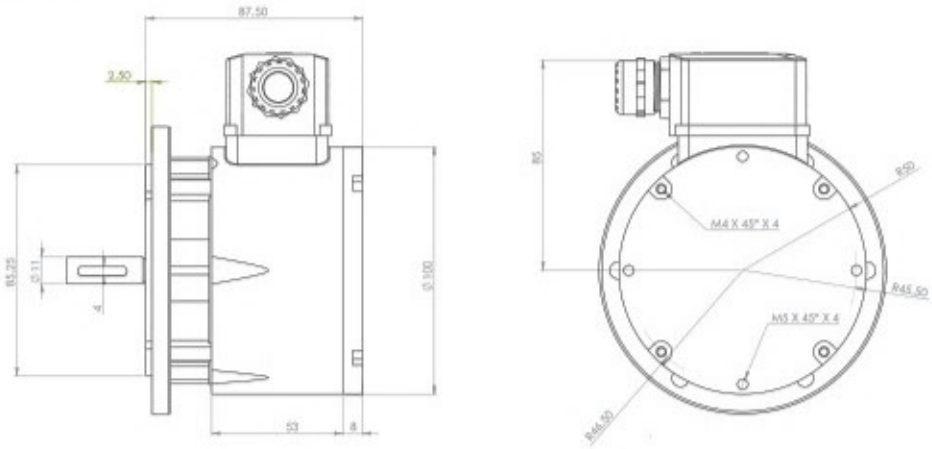

Encoder Part Number

FHD	S	115	11	DN	30V	1024	–	T

S : Shaft

Flange : 115mm

Shaft Diamater
11 : 11mm shaft with keyway

DN: ABZ + Inverted

Electrical Connections:
T : Terminal box
M : M23 12L pin connector
C : Cable
R : Redundant Dsub Connection

PPR Options :
1000 - 1024 - 2000 - 2048 - 2500 - 4096 - 5000 - 8092 - 10000

Supply Voltage and output circuit :
5V : 5Vin / out
245V : 5-30Vin 5Vout
30V : 5-30Vin / out

Redundant Connections

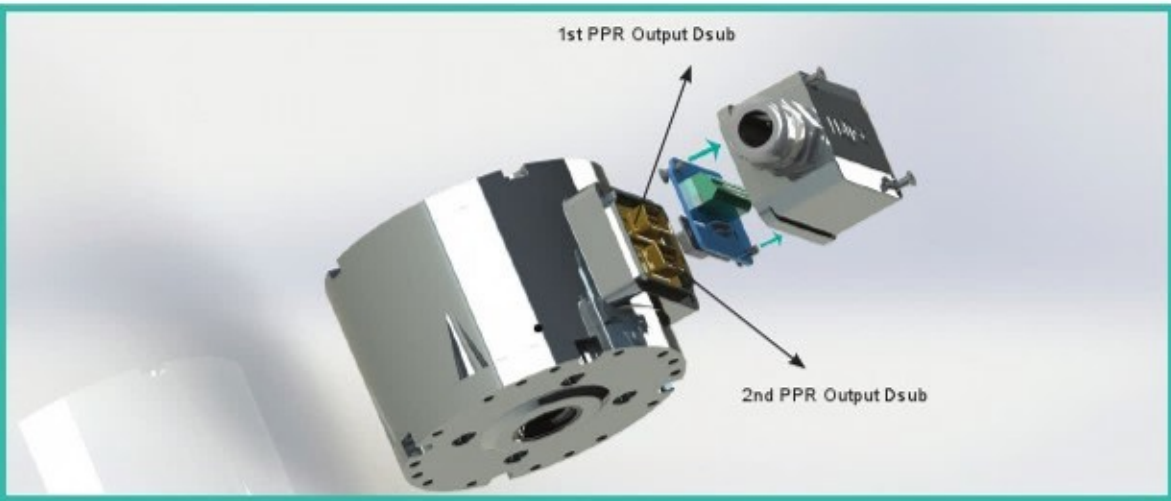

1st PPR output and 2nd PPR output are totally redundant. Optical and electronic side are independent.

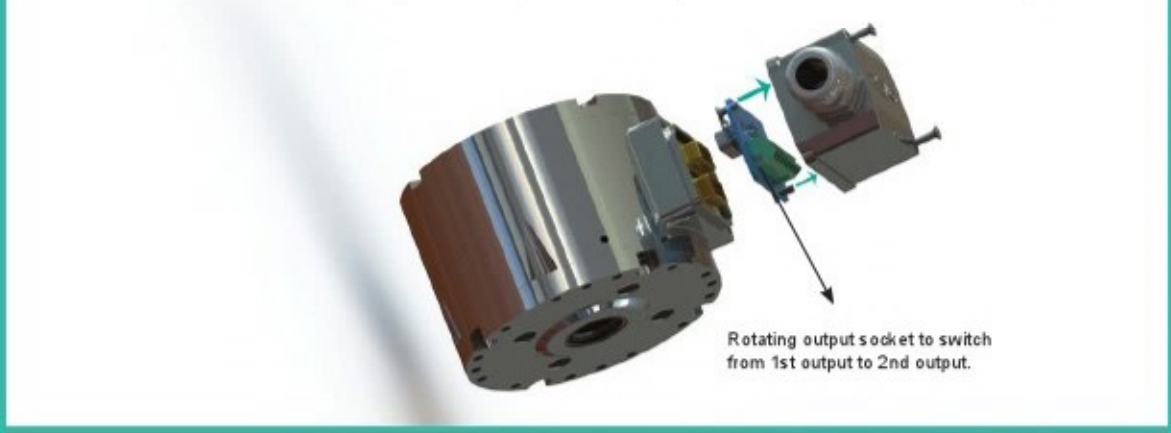

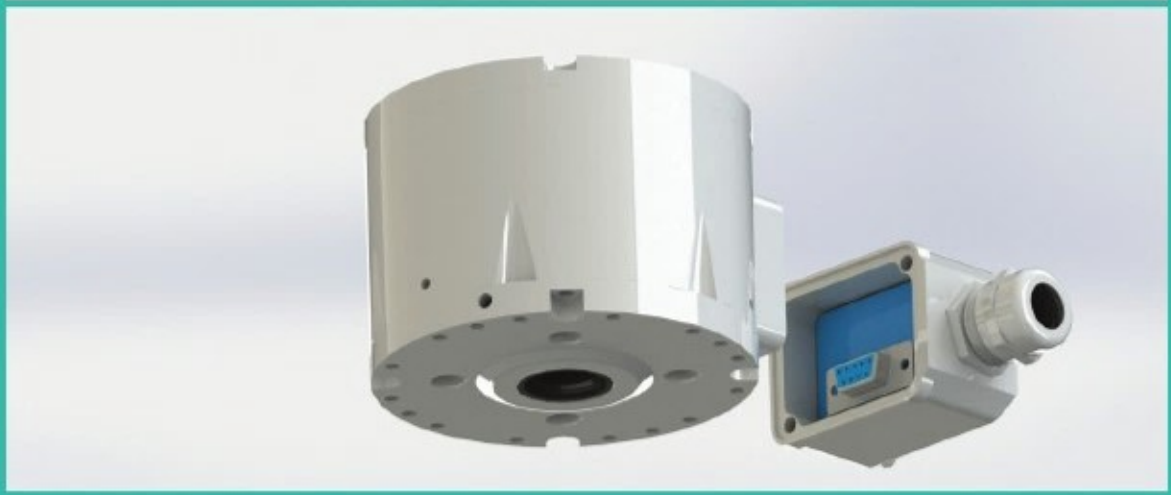

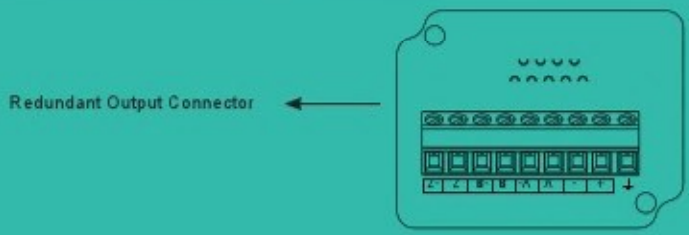

FHD H100 Mounting

1	M20x1,5 Nipel (Kablo Çıkışı)	1	M20x1,5 Nipple (Cable Out)
2	M20x1,5 Nipel Somunu	2	M20x1,5 Nipple Leaf
3	Topraklama M3 Bolt	3	Earthing M3 Bolt
4	Tork Kolu Aksesuar Olarak Mevcut	4	Torque Arm Available As Accessory
5	Genişlik 10 mm	5	Width 10 mm

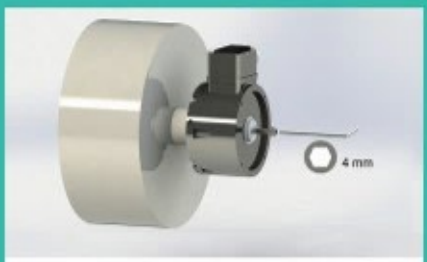

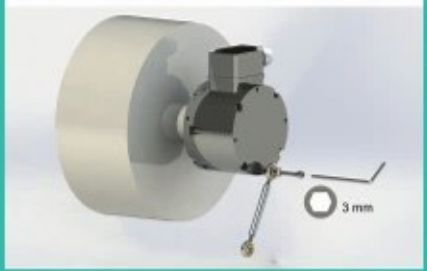

Doğrudan Montaj
direct mountaing

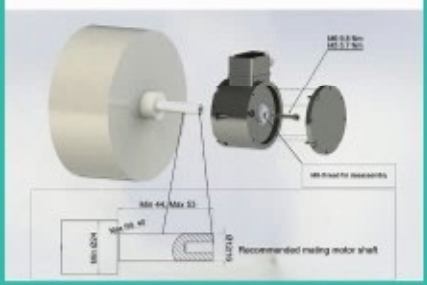

FHD S115 Mounting

1	Gövde	1	Housing
2	Fleng	2	Flange
3	Montaj Kanalı	3	Solid shaft with key
4	Kablo Terminal Kapağı	4	Terminal box cover
5	Nipel (Rekor)	5	Screw with torx and slotted drive
6	Bağlantı Klemensi	6	Connecting terminal

Features:

- Robust, compakt housing
- Two bearings with large distance
- High shaft load up to 400 N
- Highest operating speed 10000 rpm
- Terminal box, M23 connector, cable options

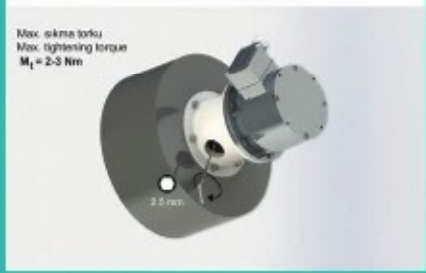

FENAC
DS15
ABSOLUTE ENCODERS
+VDC Kahve / Yeşil (BROWN-GREEN)
GND Beyaz / Yeşil (WHITE-GREEN)
A Yeşil / Siyah (GREEN-BLACK)
A- Sarı / Siyah (YELLOW-BLACK)
B Mavi / Siyah (BLUE-BLACK)
B- Kırmızı / Siyah (RED-BLACK)
C Gri (GREY)
C- Pembe (PINK)
D Sarı (YELLOW)
D- Mor (PURPLE)
Shield connected to housing
www.fenac.com
TURKISH MADE

FENAC Automation Control

Absolute encoders

- **Flexibilitiy**
- **Variety**

Motion Control Products

Absolute encoders - SSI / BiSS

Shaft with clamping or synchro flange
Single turn 9...14 bit,
Multi turn 0...32 bit

FNC AS 40 S Series

Features

- **Encoder single - or multiturn / SSI - BISS**
- **Magnetic Sensing**
- **Magnetic Single turn Resolution: 9...14 bit**
- **Multi turn 0...32 bit**
- **Clamping flange or synchro flange**
- **Permanent check of code continuity**
- **Extreme resistance to shock and vibration**
- **Encoder with electronic reset**

Technical data - electrical ratings

Voltage supply	8VDC to 30VDC
Protection:	Output short circuit protection. Reverse polarity protection (except 5V version)
Consumption w/o load	≤80 mA (24 VDC)
Interface	SSI or BiSS
Resolution (steps/turn)	up to 14bit
Absolute accuracy (magnetic)	±0.35°
Optoelectronic life time	100.000 (min)
Code	Gray or binary
Inputs	SSI differential clock Direction Electronic zero setting
Output frequency	up to 2MHz (SSI) up to 10MHz (BiSS)
Output circuit	SSI data linedriver RS485
Interference immunity	DIN EN 61000-6-2
Emitted interference	DIN EN 61000-6-4
Approval	CE

Technical data - mechanical design

Dimensions (flange)	ø40 mm
Shaft loading	≤20 N axial ≤40 N radial
Protection DIN EN 60529	IP 67
Operating speed	≤10000 rpm
Starting torque	≤0.001 Nm (IP 67)
Materials	Housing, Flange : Aluminium Shaft : Stainless steel
Shaft diameter:	6, 8, 10 mm (other diameters on request)
Bearings lifetime:	$2x10^9$ rev. at 100% of full rated shaft load (minimum)
Operating temperature	-40...+90°C -40 °F ... +180 °F
Weight approx.	250 g

Pulse Diagram

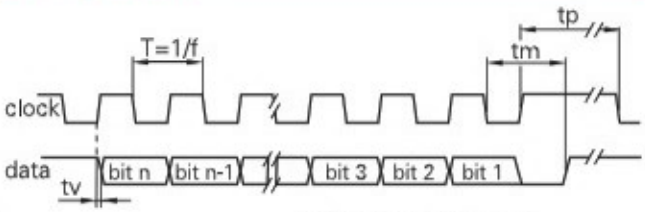

Clock frequency, f	50...2000 kHz for SSI up to 10MHz for BISS
Code	Binary or gray
Status and parity bit	On request
Monoflop time tm	>15µs
Clock time out	Programmable at factory

FNC AS 40 S Series

Mechanical Dimensions

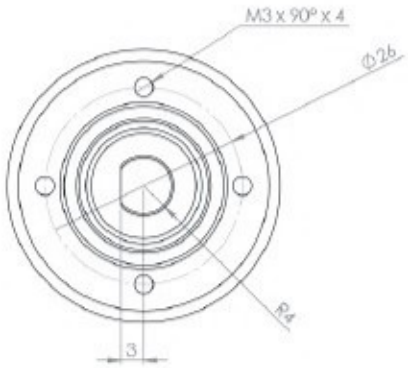

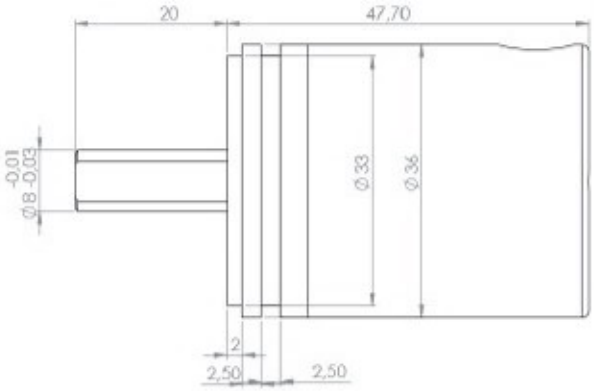

Terminal significance

+Vs	Encoder supply voltage.
0 V	Encoder ground connection relating to +Vs.
Data+	Positive data output.
Data-	Negative data output.
Clock+	Positive SSI clock input.
Clock-	Negative SSI clock input.
Direction	UP/DOWN counting direction input. This input is standart on High. UP/DOWN means ascending output data with clock-wise shaft rotation when looking at flange.
Preset	Parameter for setting the encoder to a requested position value assigned to a defined shaft position of the system.The offset of encoder zero point and mechanical zero point is stored in the encoder.
Note	If needed, Include termination resistor R=120 Ohm between Data+ and Data- on control side.

Encoder Part Number

FNC A S 40 S 10 S12 M12 30V B – R4

Absolute

S: SSI **B:** BISS

Housing: 40 : 40mm

Flange Type:
S : Servo flange **B :** Clamping flange

Shaft diameter : 6, 8, 10
Other dimensions on request

S : Single Turn
12...14 bit options

Electrical Connections:
Cable
R4 : radial 4m **R1C4 :** connector after 1m Cable
Connector:
CRM1212 CRM2312L CRM2312R

B: Binary **G:** Gray

Supply Voltage:
30V : 8-30V input

Single turn : 00
Multi turn options : 0, 4, 8, 12, 16, 18, 24, 32

Absolute encoders - SSI / BiSS

Shaft with clamping or synchro flange
Single turn 9...14 bit,
Multi turn 0...32 bit

FNC AS 458B Series

Features

- **Encoder single - or multiturn / SSI - BISS**
- **Magnetic Sensing**
- **Magnetic Single turn Resolution: 9...14 bit**
- **Multi turn 0...32 bit**
- **Clamping flange or synchro flange**
- **Permanent check of code continuity**
- **Extreme resistance to shock and vibration**
- **Encoder with electronic reset**

Technical data - electrical ratings

Voltage supply	8VDC to 30VDC
Protection:	Output short circuit protection. Reverse polarity protection (except 5V version)
Consumption w/o load	≤80 mA (24 VDC)
Interface	SSI or BiSS
Resolution (steps/turn)	up to 14 bit
Absolute accuracy (magnetic)	±0.35°
Optoelectronic life time	100.000 (min)
Code	Gray or binary
Inputs	SSI differential clock Direction Electronic zero setting
Output frequency	up to 2MHz (SSI) up to 10MHz (BiSS)
Output circuit	SSI data linedriver RS485
Interference immunity	DIN EN 61000-6-2
Emitted interference	DIN EN 61000-6-4
Approval	CE

Technical data - mechanical design

Dimensions (flange)	ø58 mm
Shaft loading	≤20 N axial ≤40 N radial
Protection DIN EN 60529	IP 67
Operating speed	≤10000 rpm
Starting torque	≤0.001 Nm (IP 67)
Materials	Housing, Flange : Aluminium Shaft : Stainless steel
Shaft diameter:	6, 8, 10 mm (other diameters on request)
Bearings lifetime:	$2x10^9$ rev. at 100% of full rated shaft load (minimum)
Operating temperature	-40...+90°C -40 °F ... +180 °F
Weight approx.	350 g

Pulse Diagram

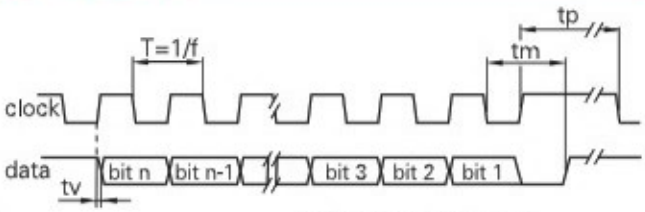

Clock frequency, f	50...2000 kHz for SSI up to 10MHz for BISS
Code	Binary or gray
Status and parity bit	On request
Monoflop time tm	>15µs
Clock time out	Programmable at factory

FNC AS 458B Series

Mechanical Dimensions

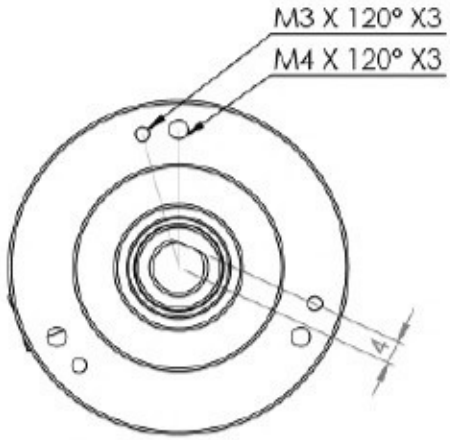

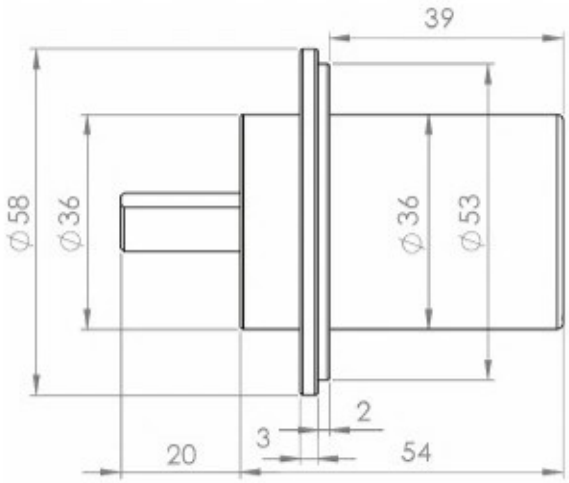

Terminal significance

+Vs	Encoder supply voltage.
0 V	Encoder ground connection relating to +Vs.
Data+	Positive data output.
Data-	Negative data output.
Clock+	Positive SSI clock input.
Clock-	Negative SSI clock input.
Direction	UP/DOWN counting direction input. This input is standart on High. UP/DOWN means ascending output data with clockwise shaft rotation when looking at flange.
Preset	Parameter for setting the encoder to a requested position value assigned to a defined shaft position of the system.The offset of encoder zero point and mechanical zero point is stored in the encoder.
Note	If needed, Include termination resistor R=120 Ohm between Data+ and Data- on control side.

Encoder Part Number

FNC A S 58 B 10 S12 M12 30V B – R4

- **A**: Absolute
- **S**: **S:** SSI **B:** BISS
- **58**: **Housing: 58 :** 58mm
- **B**: **Flange Type:** **S :** Servo flange **B :** Clamping flange
- **10**: **Shaft diameter : 6, 8, 10** Other dimensions on request
- **S12**: **S :** Single Turn 12...14 bit options
- **M12**: **Single turn :** 00 **Multi turn options :** 0, 4, 8, 12, 16, 24, 32
- **30V**: **Supply Voltage:** **30V :** 8-30V input
- **B**: **B:** Binary **G:** Gray
- **R4**: **Electrical Connections:** **Cable** **R4 :** radial 4m **R1C4 :** connector after 1m Cable **Connector:** CRM1212 CRM2312L CRM2312R

Absolute encoders - SSI / BiSS

Shaft with clamping or synchro flange
Single turn 12...19 bit,
Multi turn 4...32bit

FNC AS 58B & 58S Series

Features

- **Encoder single - or multiturn / SSI - BISS**
- **Magnetic Sensing (Optional optical sensing)**
- **Optical Single turn Resolution: 12...19 bit**
- **Magnetic Single turn Resolution: 9...13bit**
- **Multi turn 4...32bit**
- **Clamping flange or synchro flange**
- **Permanent check of code continuity**
- **Extreme resistance to shock and vibration**
- **Encoder with electronic reset**

Technical data - electrical ratings

Voltage supply	5.5VDC to 30VDC 4.75VDC to 5.5VDC
Protection:	Output short circuit protection. Reverse polarity protection (except 5V version)
Consumption w/o load	≤50 mA (24 VDC)
Interface	SSI or BiSS
Resolution (steps/turn)	up to 19 bit
Absolute accuracy (magnetic)	±0.35°
Optoelectronic life time	100.000 (min)
Code	Gray or binary
Inputs	SSI differential clock Direction Electronic zero setting Chip select (Optional)
Output frequency	up to 2MHz (SSI) up to 10MHz (BiSS)
Output circuit	SSI data linedriver RS485
Interference immunity	DIN EN 61000-6-2
Emitted interference	DIN EN 61000-6-4
Approval	CE

Technical data - mechanical design

Dimensions (flange)	ø58 mm
Shaft loading	≤140 N axial ≤240 N radial
Protection DIN EN 60529	IP 67
Operating speed	≤10000 rpm
Starting torque	≤0.025 Nm (IP 67)
Materials	Housing, Flange : Aluminium Shaft : Stainless steel
Shaft diameter:	6, 8, 10, 12 mm (other diameters on request)
Bearings lifetime:	$2x10^9$ rev. at 100% of full rated shaft load (minimum)
Operating temperature	-40...+110 °C -40 °C up to +120 °C (Storage)
Weight approx.	250 g

Accessories

Connectors and cables
CRM2312R M23 12 poles female connector or see page 112

Mounting coupling
PF481010 metal coupling or see page 110

Mounting accessories
YY TEO Spring or see page 108-109

Pulse Diagram

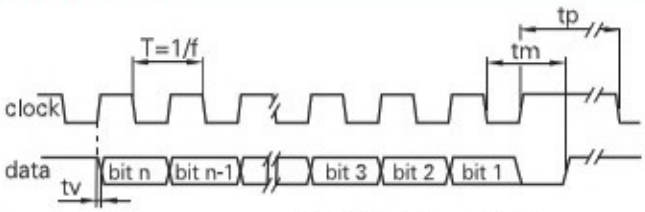

Clock frequency, f	50...2000 kHz for SSI up to 10MHz for BISS
Code	Binary or gray
Status and parity bit	On request
Monoflop time tm	>15µs
Clock time out	Programmable at factory

FNC AS 58B & 58S Series

Mechanical Dimensions

58B

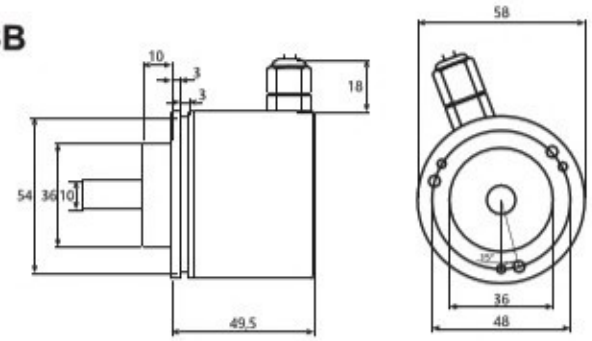

58S

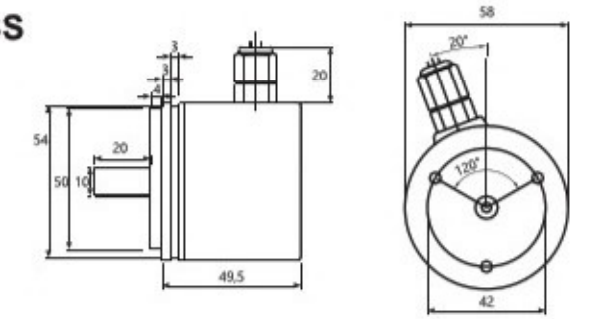

M2312R

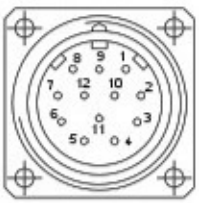

M2312L

Cable / Connector M23 male

Connector	Core colour	Signals	Description
Pin 1	blue	Clock+	Clock signal
Pin 2	blue-black	Clock-	Clock signal
Pin 3	orange	Data+	Data signal
Pin 4	orange-black	Data-	Data signal
Pin 5	gray	Zero	Zero setting input
Pin 6,7,8,9	–	n.c.	–
Pin 10	gray-black	up/down	direction input
Pin 11	white	0 V	GND
Pin 12	brown	+Vs	Supply voltage
Screen: not connected to housing			
Cable data: 4 x 2 x 0.14 mm²			

Terminal significance

+Vs	Encoder supply voltage.
0 V	Encoder ground connection relating to +Vs.
Data+	Positive data output.
Data-	Negative data output.
Clock+	Positive SSI clock input.
Clock-	Negative SSI clock input.
Zero	Input for setting a zero point anywhere within the encoder resolution. The zero setting operation is triggered by a Low impulse. Connect to +Vs after setting operation for maximum interference immunity. Impulse duration >2 ms.
Note	Include termination resistor R=120 Ohm between Data+ and Data- on control side.
Direction	UP/DOWN counting direction input. This input is standart on High. UP/DOWN means ascending output data with clockwise shaft rotation when looking at flange.

Encoder Part Number

FNC | A | S | 58 | B | 10 | S12 | M12 | 30V | B | – | R2

- A: Absolute
- S: SSI B: BISS
- 58: Housing: 58 : 58mm
- B: Flange Type: S : Servo flange B : Clamping flange
- 10: Shaft diameter : 6, 8, 10, 12 Other dimensions on request
- S12: S : Single Turn 12...19 bit options
- M12: Single turn : 00 Multi turn options : 4, 8, 12, 16, 20, 24, 32
- 30V: Supply Voltage: 5V : 5Vin / out 30V : 5-30Vin / out
- B: B: Binary G: Gray
- R2: Electrical Connections: Cable R2 : radial 2m A2 : axial 2m Connector: CRM1212 CRM2312L CRM2312R

Absolute encoders - SSI / BiSS

End Hollow Shaft - Through Hollow Shaft
Single turn 12...19 bit,
Multi turn 4...32bit

FNC AS 58E Series

Features

- **Encoder single - or multiturn / SSI - BISS**
- **Magnetic Sensing (Optional optical sensing)**
- **Optical Single turn Resolution: 12...19 bit**
- **Magnetic Single turn Resolution: 9...13bit**
- **Multi turn 4...32bit**
- **Clamping flange or synchro flange**
- **Permanent check of code continuity**
- **Extreme resistance to shock and vibration**
- **Encoder with electronic reset**

Technical data - electrical ratings

Voltage supply	5.5VDC to 30VDC 4.75VDC to 5.5VDC
Protection:	Output short circuit protection. Reverse polarity protection (except 5V version)
Consumption w/o load	≤50 mA (24 VDC)
Interface	SSI or BiSS
Resolution (steps/turn)	up to 19 bit
Absolute accuracy (Magnetic)	±0.35°
Optoelectronic life time	100.000 (min)
Code	Gray or binary
Inputs	SSI differential clock Direction Electronic zero setting Chip select (Optional)
Output frequency	up to 2MHz (SSI) up to 10MHz (BiSS)
Output circuit	SSI data linedriver RS485
Interference immunity	DIN EN 61000-6-2
Emitted interference	DIN EN 61000-6-4
Approval	CE

Accessories

Connectors and cables
CRM2312R M23 12 poles female connector or see page 112

Mounting coupling
See page 110

Mounting accessories
YY TEO Spring or see page 108-109

Technical data - mechanical design

Dimensions (flange)	ø58 mm
Shaft loading	≤140 N axial ≤240 N radial
Protection DIN EN 60529	IP54, IP65
Operating speed	≤10000 rpm
Starting torque	≤0.025 Nm (IP 67)
Materials	Housing, Flange : Aluminium Shaft : Stainless steel
Shaft diameter:	6, 8, 10, 12, 14 mm (other diameters on request)
Bearings lifetime:	$2x10^9$ rev. at 100% of full rated shaft load (minimum)
Operating temperature	-40...+110 °C -40 °C up to +120 °C (Storage)
Weight approx.	250 g

Pulse Diagram

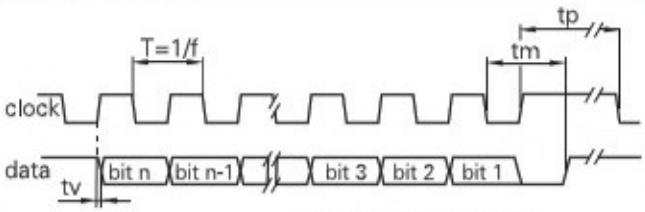

Clock frequency, f	50...2000 kHz for SSI up to 10MHz for BISS
Code	Binary or gray
Status and parity bit	On request
Monoflop time tm	>15µs
Clock time out	Programmable at factory

FNC AS 58E Series

Mechanical Dimensions

58E

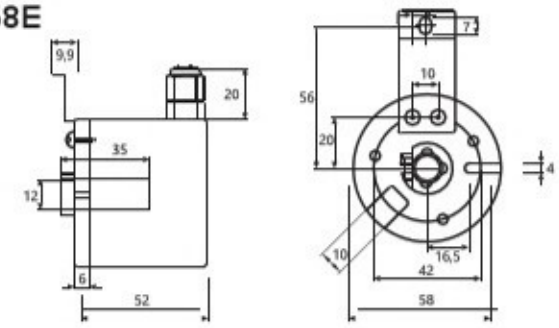

58H

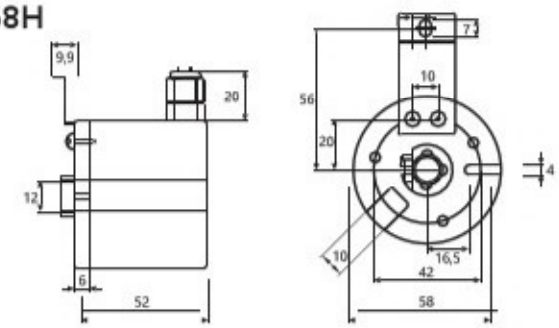

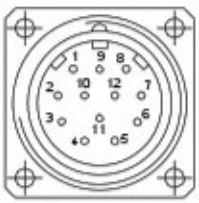

M2312R

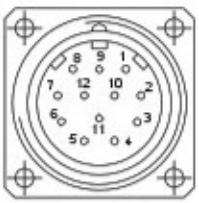

M2312L

Cable / Connector M23 male

Connector	Core colour	Signals	Description
Pin 1	blue	Clock+	Clock signal
Pin 2	blue-black	Clock-	Clock signal
Pin 3	orange	Data+	Data signal
Pin 4	orange-black	Data-	Data signal
Pin 5	gray	Zero	Zero setting input
Pin 6,7,8,9	–	n.c.	–
Pin 10	gray-black	up/down	direction input
Pin 11	white	0 V	GND
Pin 12	brown	+Vs	Supply voltage
Screen: not connected to housing			
Cable data: 4 x 2 x 0.14 mm²			

Terminal significance

+Vs	Encoder supply voltage.
0 V	Encoder ground connection relating to +Vs.
Data+	Positive data output.
Data-	Negative data output.
Clock+	Positive SSI clock input.
Clock-	Negative SSI clock input.
Zero	Input for setting a zero point anywhere within the encoder resolution. The zero setting operation is triggered by a Low impulse. Connect to +Vs after setting operation for maximum interference immunity. Impulse duration >2 ms.
Note	Include termination resistor R=120 Ohm between Data+ and Data- on control side.
Direction	UP/DOWN counting direction input. This input is standart on High. UP/DOWN means ascending output data with clockwise shaft rotation when looking at flange.

Encoder Part Number

FNC | A | S | 58 | E | 10 | S12 | M12 | 30V | B | – | R2

- A: Absolute
- S: SSI B: BISS
- 58: Housing: 58 : 58mm
- E: Flange Type: E : End hollow shaft H : Through hollow shaft
- 10: Shaft diameter : 6, 8, 10, 12, 14 Other dimensions on request
- S12: S : Single Turn 12...19 bit options
- M12: Single turn : 00 Multi turn options : 4, 8, 12, 16, 20, 24, 32
- 30V: Supply Voltage: 5V : 5Vin / out 30V : 5-30Vin / out
- B: B: Binary G: Gray
- R2: Electrical Connections: Cable R2 : radial 2m A2 : axial 2m Connector: CRM1212 CRM2312L CRM2312R

Absolute encoders - CANopen

Shaft with clamping or synchro flange
Single turn 9...16 bit,
Multi turn 0...16 bit

FNC AC 40S Series

Features

- **Encoder single - or multiturn / CANopen**
- **Magnetic Sensing**
- **Single turn Resolution: 9...16 bit**
- **Multi turn 0...16 bit**
- **Clamping flange or synchro flange**
- **Extreme resistance to shock and vibration**
- **Permanent check of code continuity**
- **Resolution end zero point programmable**

Technical data - electrical ratings

Voltage supply	8VDC to 30VDC
Protection:	Output short circuit protection. Reverse polarity protection (except 5V version)
Consumption w/o load	≤80 mA (24 VDC)
Interface	CANopen CiA DSP 301 V4.01, DSP 305 V1.0, DSP 406 V3.1
Resolution (steps/turn)	up to 16 bit
Absolute accuracy	±0.035°
Sensing method	Magnetic
Code	Binary
Code sequance	CW default, programmable
Programmable paramaters	Operating modes Total resolution Scaling Rotation speed monitoring Node ID Baud Rate
Note:	All paramaters change via microchip interface
Interference immunity	DIN EN 61000-6-2
Emitted interference	DIN EN 61000-6-4
Approval	CE

Technical data - mechanical design

Dimensions (flange)	ø40 mm
Shaft loading	≤40 N axial ≤80 N radial
Protection DIN EN 60529	IP54, IP65
Operating speed	≤10000 rpm
Starting torque	≤0.001Nm (IP 65)
Materials	Housing, Flange : Aluminium Shaft : Stainless steel
Shaft diameter:	6, 8, 10 mm (other diameters on request)
Bearings lifetime:	$2x10^9$ rev. at 100% of full rated shaft load (minimum)
Operating temperature	-40...+90 °C -40 °F ...+180 °F
Weight approx.	350 g

Absolute encoders - CANopen

Shaft with clamping or synchro flange
Single turn 9...16 bit,
Multi turn 0...16 bit

FNC AC 40S Series

Mechanical Dimensions

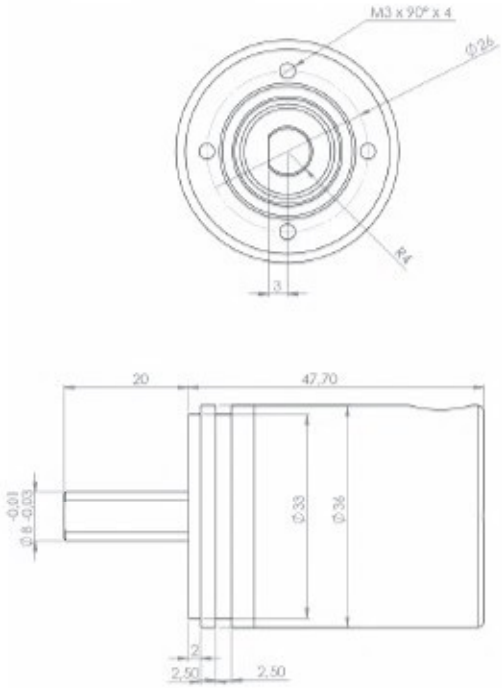

CANopen® features

Bus protocol	CANopen
Device profile	CANopen - CiA DS 406
Preset	Parameter for setting the encoder to a requested position value assigned to a defined shaft position of the system. The offset of encoder zero point and mechanical zero point is stored in the encoder.
Rotating direction	The rotating direction in which there have to be ascending or descending position values can be defined. Default setting: Ascending position values when looking at the flange and rotating the shaft clockwise.
Scaling	Parameter defining the steps per turn as well as the total resolution.
Diagnosis	The encoder supports the following error warnings: - Position error - Lithium battery voltage (multiturn)
Default	125 kbit/s, Node ID 1

Terminal assignment

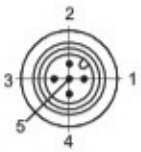

Connector M12

Conn.	Signals	Description
Pin 1	n.c.	–
Pin 2	+Vs	Supply voltage
Pin 3	CAN_GND	CAN Ground
Pin 4	CAN_H	Bus (dominant High)
Pin 5	CAN_L	Bus (dominant Low)

Cable

Core colour	Signals	Description
white	0 V	Supply voltage
brown	+Vs	Supply voltage
green	CAN_H	Bus (dominant High
yellow	CAN_L	Bus (dominant Low)

Encoder Part Number

FNC A C 40 S 10 S12 M12 30V B – R4

- **A**: **Absolute**
- **C**: **C:** CANopen
- **40**: **Housing: 40:** 40mm
- **S**: **Flange Type:** **S :** Servo flange **B :** Clamping flange
- **10**: **Shaft diameter : 6, 8, 10** Other dimensions on request
- **S12**: **S :** Single Turn 9...16 bit options
- **M12**: **Single turn :** 00 **Multi turn options :** 0, 8, 12, 16
- **30V**: **Supply Voltage:** **30V :** 8-30V input
- **B**: **B:** Binary
- **R4**: **Electrical Connections:** **Cable** **R4 :** radial 4m **R1C4 :** connector after 1m cable **Connector:** CRM1212 CRM2312L CRM2312R

Absolute encoders - CANopen

Shaft with clamping or synchro flange
Single turn 9...16 bit,
Multi turn 0...16 bit

FNC AC 458B Series

Features

- **Encoder single - or multiturn / CANopen**
- **Magnetic Sensing**
- **Magnetic Single turn Resolution: 9...16 bit**
- **Multi turn 0...16 bit**
- **Clamping flange or synchro flange**
- **Extreme resistance to shock and vibration**
- **Permanent check of code continuity**
- **Resolution end zero point programmable**

Technical data - electrical ratings

Voltage supply	8VDC to 30VDC
Protection:	Output short circuit protection. Reverse polarity protection (except 5V version)
Consumption w/o load	≤80 mA (24 VDC)
Interface	CANopen CiA DSP 301 V4.01, DSP 305 V1.0, DSP 406 V3.1
Resolution (steps/turn)	up to 16 bit
Absolute accuracy	±0.035°
Sensing method	Magnetic
Code	Binary
Code sequance	CW default, programmable
Programmable paramaters	Operating modes Total resolution Scaling Rotation speed monitoring Node ID Baud Rate
Note:	All paramaters change via microchip interface
Interference immunity	DIN EN 61000-6-2
Emitted interference	DIN EN 61000-6-4
Approval	CE

Technical data - mechanical design

Dimensions (flange)	ø58 mm
Shaft loading	≤40 N axial ≤80 N radial
Protection DIN EN 60529	IP54, IP65
Operating speed	≤10000 rpm
Starting torque	≤0.001Nm (IP 65)
Materials	Housing, Flange : Aluminium Shaft : Stainless steel
Shaft diameter:	6, 8, 10 mm (other diameters on request)
Bearings lifetime:	$2x10^9$ rev. at 100% of full rated shaft load (minimum)
Operating temperature	-40...+90 °C -40 °F ...+180 °F
Weight approx.	350 g

Mechanical Dimensions

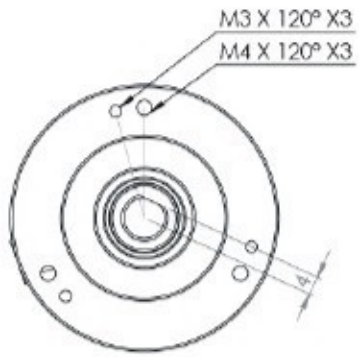

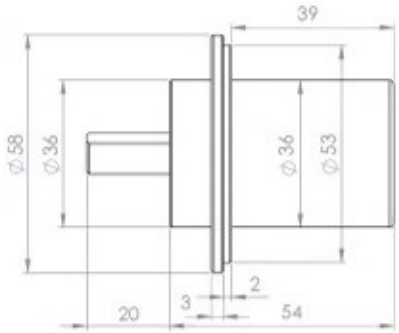

CANopen® features

Bus protocol	CANopen
Device profile	CANopen - CiA DS 406
Preset	Parameter for setting the encoder to a requested position value assigned to a defined shaft position of the system. The offset of encoder zero point and mechanical zero point is stored in the encoder.
Rotating direction	The rotating direction in which there have to be ascending or descending position values can be defined. Default setting: Ascending position values when looking at the flange and rotating the shaft clockwise.
Scaling	Parameter defining the steps per turn as well as the total resolution.
Diagnosis	The encoder supports the following error warnings: - Position error - Lithium battery voltage (multiturn)
Default	125 kbit/s, Node ID 1

Terminal assignment

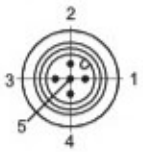

Connector M12

Conn.	Signals	Description
Pin 1	n.c.	–
Pin 2	+Vs	Supply voltage
Pin 3	CAN_GND	CAN Ground
Pin 4	CAN_H	Bus (dominant High)
Pin 5	CAN_L	Bus (dominant Low)

Cable

Core colour	Signals	Description
white	0 V	Supply voltage
brown	+Vs	Supply voltage
green	CAN_H	Bus (dominant High
yellow	CAN_L	Bus (dominant Low)

Encoder Part Number

FNC A C 58 B 10 S12 M12 30V B – R4

- **A** → **Absolute**
- **C** → **C:** CANopen
- **58** → **Housing: 58:** 58mm
- **B** → **Flange Type:** **S :** Servo flange **B :** Clamping flange
- **10** → **Shaft diameter : 6, 8, 10,** Other dimensions on request
- **S12** → **S :** Single Turn 12..16 bit options
- **M12** → **Single turn :** 00 **Multi turn options :** 0, 4, 8, 12, 16
- **30V** → **Supply Voltage:** **5V** : 5V in / out **30V** : 5-30V in / out
- **B** → **B:** Binary
- **R4** → **Electrical Connections:** **Cable** **R4 :** radial 4m **R1C4 :** connector after 1m cable **Connector:** CRM1212 CRM2312L CRM2312R

Absolute encoders - CANopen

Shaft with clamping or synchro flange
Single turn 12...19 bit,
Multi turn 4...32bit

FNC AC 58B & 58S Series

Features

- **Encoder single - or multiturn / CANopen**
- **Magnetic Sensing**
- **Optical Single turn Resolution: 12...19 bit (optional)**
- **Magnetic Single turn Resolution: 9...13bit**
- **Multi turn 4...32bit**
- **Clamping flange or synchro flange**
- **Extreme resistance to shock and vibration**
- **Permanent check of code continuity**
- **Resolution end zero point programmable**

Technical data - electrical ratings

Voltage supply	5.5VDC to 30VDC 4.75VDC to 5.5VDC
Protection:	Output short circuit protection. Reverse polarity protection (except 5V version)
Consumption w/o load	≤100 mA (24 VDC)
Interface	CANopen CiA DSP 301 V4.01, DSP 305 V1.0, DSP 406 V3.1
Resolution (steps/turn)	up to 13bit
Absolute accuracy	±0.035°
Sensing method	Magnetic
Code	Binary
Code sequance	CW default, programmable
Programmable paramaters	Operating modes Total resolution Scaling Rotation speed monitoring
Interference immunity	DIN EN 61000-6-2
Emitted interference	DIN EN 61000-6-4
Approval	CE

Technical data - mechanical design

Dimensions (flange)	ø58 mm
Shaft loading	≤40 N axial ≤60 N radial
Protection DIN EN 60529	IP54, IP65
Operating speed	≤10000 rpm
Starting torque	≤0.025 Nm (IP 65)
Materials	Housing, Flange : Aluminium Shaft : Stainless steel
Shaft diameter:	6, 8, 10, 12 mm (other diameters on request)
Bearings lifetime:	$2x10^9$ rev. at 100% of full rated shaft load (minimum)
Operating temperature	-40...+110 °C -40 °C up to +120 °C (Storage)
Weight approx.	250 g

Accessories

Connectors and cables
CRM2312R M23 12 poles female connector or see page 112

Mounting coupling
PF481010 metal coupling or see page 110

Mounting accessories
YY TEO Spring or see page 108-109

FNC AC 58B & 58S Series

Mechanical Dimensions

58B

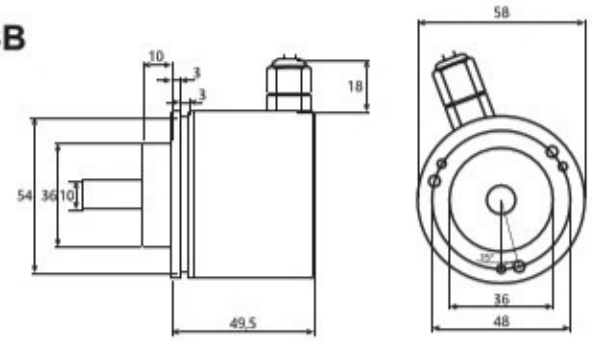

58S

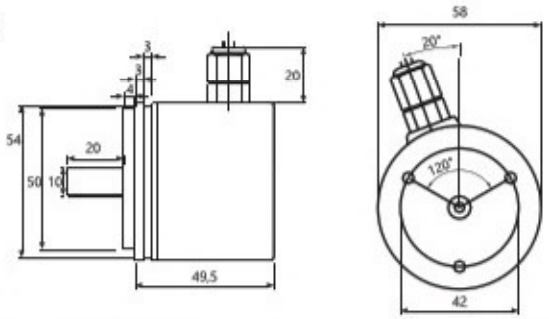

CANopen® features

Bus protocol	CANopen
Device profile	CANopen - CiA DS 406
Operating modes	- Event-triggered / Time-triggered - Sync (cyclic)
Preset	Parameter for setting the encoder to a requested position value assigned to a **defined shaft position of the system.** The offset of encoder zero point and mechanical zero point is stored in the encoder.
Rotating direction	The rotating direction in which there have to be ascending or descending **position values can be defined. Default** setting: Ascending position values when **looking at the flange and rotating the** shaft clockwise.
Scaling	**Parameter defining the steps per turn as** well as the total resolution.
Diagnosis	The encoder supports the following error warnings: - Position error - Lithium battery voltage (multiturn)
Node Monitoring	Heartbeat
Default	125 kbit/s, Node ID 1

Terminal assignment

Connector M12

Conn.	Signals	Description
Pin 1	n.c.	–
Pin 2	+Vs	Supply voltage
Pin 3	CAN_GND	CAN Ground
Pin 4	CAN_H	Bus (dominant High)
Pin 5	CAN_L	Bus (dominant Low)

Cable

Core colour	Signals	Description
white	0 V	Supply voltage
brown	+Vs	Supply voltage
green	CAN_H	Bus (dominant High
yellow	CAN_L	Bus (dominant Low)

Encoder Part Number

FNC A C 58 B 10 S12 M12 30V B – R2

- A: Absolute
- C: CANopen
- 58: Housing
- B: Flange Type: S : Servo flange B : Clamping flange
- 10: Shaft diameter : 6, 8, 10, 12 Other dimensions on request
- S12: S : Single Turn 8...13bit options
- M12: Single turn : 00 Multi turn options : 4, 8, 12, 16, 20, 24, 32
- 30V: Supply Voltage: 5V : 5Vin / out 30V : 5-30Vin / out
- B: B: Binary
- R2: Electrical Connections: Cable R2 : radial 2m A2 : axial 2m Connector: CRM1212 CRM2312L CRM2312R

Absolute encoders - CANopen

End Hollow Shaft - Through Hollow Shaft
Single turn 12...19 bit,
Multi turn 4...32bit

FNC AC 58E Series

Features

- **Encoder single - or multiturn / CANopen**
- **Magnetic Sensing (Optional optical sensing)**
- **Optical Single turn Resolution: 12...19 bit (optional)**
- **Magnetic Single turn Resolution: 9...13bit**
- **Multi turn 4...32bit**
- **Clamping flange or synchro flange**
- **Extreme resistance to shock and vibration**
- **Permanent check of code continuity**
- **Resolution end zero point programmable**

Technical data - electrical ratings

Voltage supply	5.5VDC to 30VDC 4.75VDC to 5.5VDC
Protection:	Output short circuit protection. Reverse polarity protection (except 5V version)
Consumption w/o load	≤100 mA (24 VDC)
Interface	CANopen CiA DSP 301 V4.01, DSP 305 V1.0, DSP 406 V3.1
Resolution (steps/turn)	up to 13bit
Absolute accuracy	±0.035°
Sensing method	Magnetic
Code	Binary
Code sequance	CW default, programmable
Programmable paramaters	Operating modes Total resolution Scaling Rotation speed monitoring
Interference immunity	DIN EN 61000-6-2
Emitted interference	DIN EN 61000-6-4
Approval	CE

Technical data - mechanical design

Dimensions (flange)	ø58 mm
Shaft loading	≤40 N axial ≤60 N radial
Protection DIN EN 60529	IP54, IP65
Operating speed	≤10000 rpm
Starting torque	≤0.025 Nm (IP 65)
Materials	Housing, Flange : Aluminium Shaft : Stainless steel
Shaft diameter:	6, 8, 10, 12, 14 mm (other diameters on request)
Bearings lifetime:	$2x10^9$ rev. at 100% of full rated shaft load (minimum)
Operating temperature	-40...+110 °C -40 °C up to +120 °C (Storage)
Weight approx.	250 g

Accessories

Connectors and cables
CRM2312R M23 12 poles female connector or see page 112

Mounting coupling
See page 110

Mounting accessories
YY TEO Spring or see page 108-109

FNC AC 58E Series

Mechanical Dimensions

58E

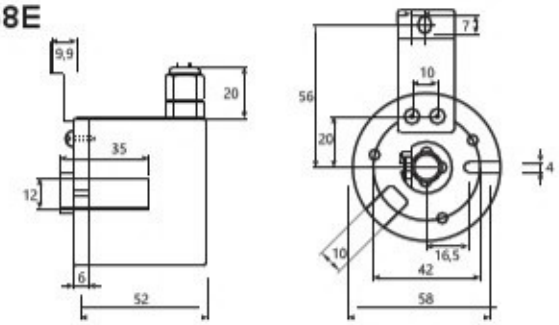

58H

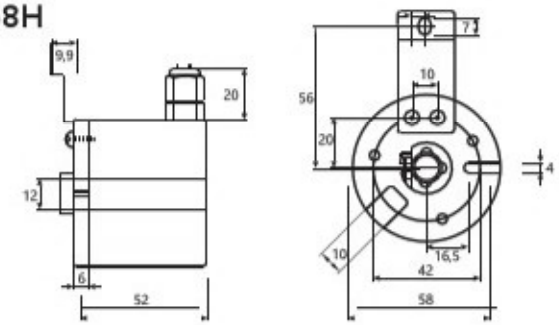

CANopen® features

Bus protocol	CANopen
Device profile	CANopen - CiA DS 406
Operating modes	- Event-triggered / Time-triggered - Sync (cyclic)
Preset	Parameter for setting the encoder to a requested position value assigned to a **defined shaft position of the system.** The offset of encoder zero point and mechanical zero point is stored in the encoder.
Rotating direction	The rotating direction in which there have to be ascending or descending **position values can be defined. Default** setting: Ascending position values when **looking at the flange and rotating the** shaft clockwise.
Scaling	**Parameter defining the steps per turn as** well as the total resolution.
Diagnosis	The encoder supports the following error warnings: - Position error - Lithium battery voltage (multiturn)
Node Monitoring	Heartbeat
Default	125 kbit/s, Node ID 1

Terminal assignment

Connector M12

Conn.	Signals	Description
Pin 1	n.c.	–
Pin 2	+Vs	Supply voltage
Pin 3	CAN_GND	CAN Ground
Pin 4	CAN_H	Bus (dominant High)
Pin 5	CAN_L	Bus (dominant Low)

Cable

Core colour	Signals	Description
white	0 V	Supply voltage
brown	+Vs	Supply voltage
green	CAN_H	Bus (dominant High
yellow	CAN_L	Bus (dominant Low)

Encoder Part Number

FNC A C 58 E 10 S12 M12 30V B – R2

- **A**: Absolute
- **C**: C: CANopen
- **58**: Housing: 58 : 58mm
- **E**: Flange Type: E : End hollow shaft H : Through hollow shaft
- **10**: Shaft diameter : 6, 8, 10, 12 Other dimensions on request
- **S12**: S : Single Turn 8...13bit options
- **M12**: Single turn : 00 Multi turn options : 4, 8, 12, 16, 20, 24, 32
- **30V**: Supply Voltage: 5V : 5Vin / out 30V : 5-30Vin / out
- **B**: B: Binary
- **R2**: Electrical Connections: Cable R2 : radial 2m A2 : axial 2m Connector: CRM1212 CRM2312L CRM2312R

Absolute encoders - Parallel

Shaft with synchro and clamping flange
Magnetic single turn 12 bit encoder

FNC APA 50B Series

Features

- **Absolute encoder with parallel interface**
- **Magnetic sensing**
- **Resolution: up to 12 bit**
- **Synchro or clamping flange**
- **Optional Preset input**
- **Optional Direction input**

Technical data - electrical ratings

Voltage supply	5V to 30V DC
Protection:	Reverse & over voltage Output short circuit
Consumption w/o load	≤60 mA (outputs unloaded)
Interface	Parallel
Resolution (steps/turn)	up to 12 bit
Absolute accuracy	≤ ±0.35°
Sensing methode	Magnetic
Code	Gray or binary
Inputs	Direction (CW / CCW) Preset (Zero setting)
Direction of rotation	Output is incremented by CW (as viewed from the shaft side)
Initializing time	Typ. 60ms after power on
Max. responese freq.	10 kHz
Output capacity	16mA (sink/source)
Output circuit	Push-Pull (opt. Open-Collector)
Interference immunity	DIN EN 61000-6-2
Emitted interference	DIN EN 61000-6-4
Approval	CE

Technical data - mechanical design

Dimensions (flange)	ø50 mm
Shaft loading	≤ 20 N axial ≤ 30 N radial
Protection DIN EN 60529	IP 54 (optional IP65)
Operating speed	≤ 3000 rpm
Starting torque	≤ 0.001 Nm
Materials	Housing, Flange : Aluminium Shaft :Stainless steel
Shaft diameter:	6, 8, 10, 12 mm (other diameters on request)
Bearings lifetime:	$2x10^9$ rev. at 100% of full rated shaft load (minimum)
Operating temperature	-20 to +85 °C
Weight approx.	180 g

Note: Custom (non-binary) resolutions can be implemented on request. eg. 360 or 1000.

FNC APA 50B Series

Mechanical Dimensions

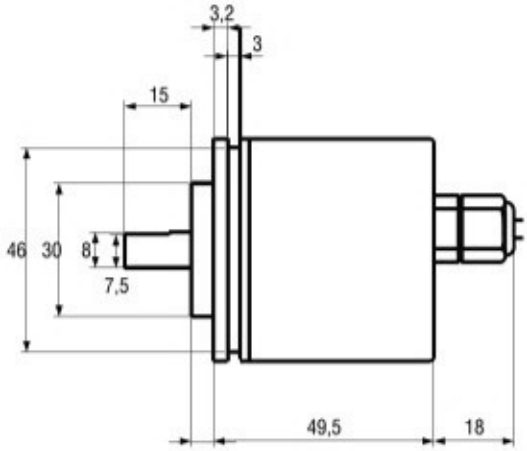

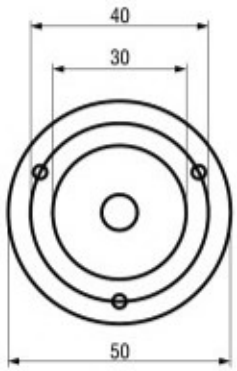

Cable Wiring / Connector

Function	Connector	Color	Renk
+VB	pin 1	Brown	Kahve
GND	pin 2	White	Beyaz
Bit 0	pin 3	Green	Yeşil
Bit 1	pin 4	Green-Black	Yeşil-Siyah
Bit 2	pin 5	Yellow	Sarı
Bit 3	pin 6	Yellow-Black	Sarı-siyah
Bit 4	pin 7	Blue	Mavi
Bit 5	pin 8	Blue-Black	Mavi-Siyah
Bit 6	pin 9	Orange	Turuncu
Bit 7	pin 10	Orange-Black	Turuncu-Siyah
Bit 8	pin 11	Red	Kırmızı
Bit 9	pin 12	Red-Black	Kırmızı-Siyah
Bit 10	pin 13	Pink	Pembe
Bit 11	pin 14	Pink-Black	Pembe-Siyah
PRESET	pin 15	Gray	Gri
DIRECTION	pin 16	Gray-Black	Gri-Siyah

NOTE : Preset and Direction inputs are optional
Connector is free hanging, inline type

Encoder Part Number

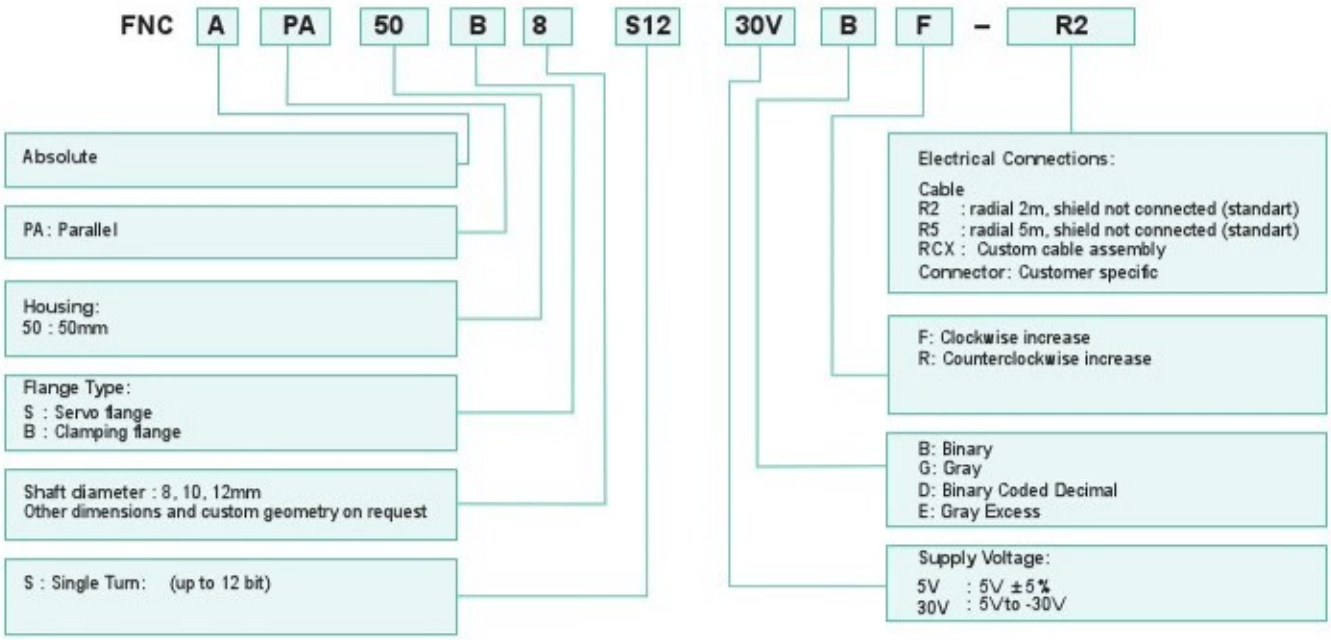

Absolute encoders - SSI / BiSS + SinCos

Integral bearing for integration in motors

FNC ASS 58 Series

Features

- **Encoder singleturn, SSI / BiSS + SinCos**
- **Optical sensing**
- **Resolution: 13 bit standard, programmable**
- **2048 SinCos signal**
- **Clamping flange or synchro flange**
- **Permanent check of code continuity**
- **Extreme resistance to shock and vibration**
- **Encoder with electronic reset**

Technical data - electrical ratings

Voltage supply	5.5VDC to 30VDC 4.75VDC to 5.5VDC
Protection:	Output short circuit protection. Reverse polarity protection (except 5V version)
Consumption w/o load	≤50 mA (24 VDC)
Interface	SSI or BiSS
Resolution (steps/turn)	up to 19 bit
Absolute accuracy	±0.025°
Optoelectronic life time	100.000 (min)
Code	Gray or binary
Inputs	SSI differential clock Direction Electronic zero setting Chip select (Optional)
Output frequency	up to 2MHz (SSI) up to 10MHz (BiSS)
Output circuit	SSI data linedriver RS485 2048 Sin/Cos signals
Interference immunity	DIN EN 61000-6-2
Emitted interference	DIN EN 61000-6-4
Approval	CE

Technical data - mechanical design

Dimensions (flange)	ø58 mm
Shaft loading	≤140 N axial ≤240 N radial
Protection DIN EN 60529	IP54, IP65
Operating speed	≤10000 rpm
Starting torque	≤0.025 Nm (IP 67)
Materials	Housing, Flange : Aluminium Shaft : Stainless steel
Shaft diameter:	6, 8, 10, 12 mm, standart 1:10 taper shaft, optional
Bearings lifetime:	$2x10^9$ rev. at 100% of full rated shaft load (minimum)
Operating temperature	-40...+110 °C -40 °C up to +120 °C (Storage)
Weight approx.	250 g

Accessories

Connectors and cables
CRM2312R M23 12 poles female connector or see page 112

Mounting coupling
PF481010 metal coupling or see page 110

Mounting accessories
YY TEO Spring or see page 108-109

SSI Pulse Diagram

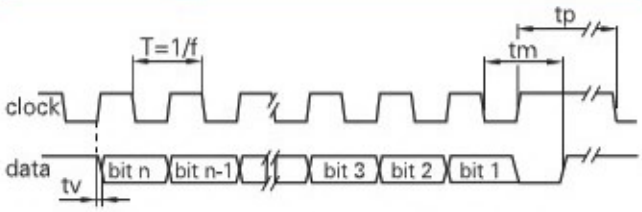

Clock frequency, f	50...2000 kHz for SSI up to 10MHz for BISS
Code	Binary or gray
Status and parity bit	On request
Monoflop time tm	>15µs
Clock time out	Programmable at factory

2048 SinCos pulse diagram

Signals shown at CW rotation with view on shaft's end

FNC ASS 58 Series

Mechanical Dimensions

58B

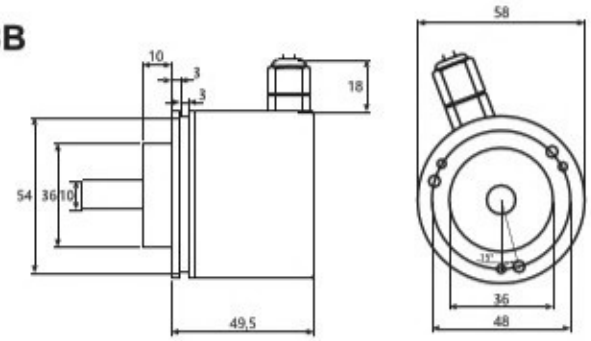

58S

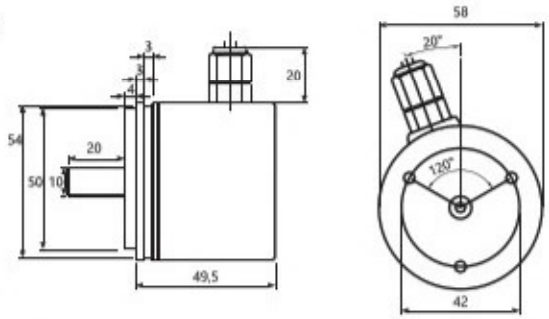

M2312R

M2312L

Sin/cos outputs termination

Connector	Core colour	Signals
Pin 6	green	A+
Pin 7	green-black	A-
Pin 8	yellow	B+
Pin 9	yellow-black	B-

Cable / Connector M23 male

Connector	Core colour	Signals	Description
Pin 1	blue	Clock+	Clock signal
Pin 2	blue-black	Clock-	Clock signal
Pin 3	orange	Data+	Data signal
Pin 4	orange-black	Data-	Data signal
Pin 5	gray	Zero	Zero setting input
Pin 6,7,8,9	see connection blow		
Pin 10	gray-black	up/down	direction input
Pin 11	white	0 V	GND
Pin 12	brown	+Vs	Supply voltage
Screen: not connected to housing			
Cable data: 4 x 2 x 0.14 mm²			

Terminal significance

+Vs	Encoder supply voltage.
0 V	Encoder ground connection relating to +Vs.
Data+	Positive data output.
Data-	Negative data output.
Clock+	Positive SSI clock input.
Clock-	Negative SSI clock input.
Zero	Input for setting a zero point anywhere within the encoder resolution. The zero setting operation is triggered by a Low impulse. Connect to +Vs after setting operation for maximum interference immunity. Impulse duration >2 ms.
Note	Include termination resistor R=120 Ohm between Data+ and Data- on control side.
Direction	UP/DOWN counting direction input. This input is standart on High. UP/DOWN means ascending output data with clockwise shaft rotation when looking at flange.

Encoder Part Number

FNC **A** **S** **58** **B** **10** **S12** **SC2** **30V** **B** – **R2**

- **A**: Absolute
- **S**: S: SSI B: BISS
- **58**: Housing: 58 : 58mm
- **B**: Flange Type: S : Servo flange B : Clamping flange E : End hollow shaft
- **10**: Shaft diameter : 6, 8, 10, 12 Other dimensions on request
- **S12**: S : Single Turn 12...19 bit options
- **SC2**: SC1: 1024 SinCos SC2: 2048 SinCos SC4: 4096 SinCos
- **30V**: Supply Voltage: 5V : 5Vin / out 30V : 5-30Vin / out
- **B**: B: Binary G: Gray
- **R2**: Electrical Connections: Cable R2 : radial 2m A2 : axial 2m Connector: CRM1212 CRM2312L CRM2312R

FENAC Automation Control

Absolute encoders bus cover

- **Modular**
- **Flexibilitiy**

Motion Control Products

Absolute encoders - Modular bus covers

Solid shaft with clamping or synchro flange
Magnetic single- or multiturn encoders

FNC AC 58B Bus Cover Series

Canopen & Profibus

Features

- **Encoder single- or multiturn / bus cover**
- **Magnetic sensing**
- **Single turn Resolution: 12...19 bit**
- **Multi turn 4...32bit**
- **Clamping flange or synchro flange**
- **Permanent check of code continuity**
- **Extreme resistance to shock and vibration**
- **Modular fieldbus interfaces**
- **Profibus / CANopen®**

Technical data - electrical ratings

Voltage supply	5.5VDC to 30VDC 4.75VDC to 5.5VDC 8VDC to 30VDC
Protection:	Output short circuit protection. Reverse polarity protection
Consumption w/o load	≤50 mA (24 VDC)
Initializing time typ.	170 ms after power on
Interface	Profibus / CANopen® /
Resolution (steps/turn)	9 to 16 bit
Number of revolution	4, 8, 12, 16, 24, 32,
Code	Binary
Code sequence	CW default, programmable
Absolute accuracy	±0,35°
Device adress	Rotary switch in bus cover
Interference immunity	DIN EN 61000-6-2
Emitted interference	DIN EN 61000-6-4
Approval	CE
Programmable parameters	Steps per revolution Number of revolutions Preset Scaling Rotating direction
Diagnostic functions	Position or parameter error Multiturn sensing
Status indicator	RED&GREEN-LED integrated in bus cover

Technical data - mechanical design

Dimensions (flange)	ø58 mm
Shaft loading	≤140 N axial ≤240 N radial
Protection DIN EN 60529	IP54, IP65
Operating speed	≤10000 rpm
Starting torque	≤0.025 Nm (IP 67)
Materials	Housing, Flange : Aluminium Shaft : Stainless steel
Shaft diameter:	10 mm (other diameters on request)
Bearings lifetime:	$2x10^9$ rev. at 100% of full rated shaft load (minimum)
Operating temperature	-25...+90 °C
Weight approx.	300 g
Connection	Bus cover
Relative humidity	95 %
Resistance	DIN EN 60068-2-6 Vibration 30 g, 10-2000 Hz DIN EN 60068-2-27 Shock 200 g, 6 ms

Accessories

Connectors and cables
CRM2312R M23 12 poles female connector or see page 112

Mounting coupling
PF481010 metal coupling or see page 110

Mounting accessories
SF58B Spring or see page 108-109

FNC AC 58B Bus Cover Series

Mechanical Dimensions

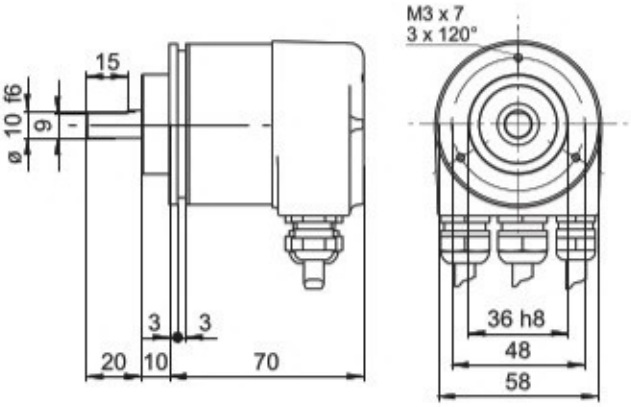

Encoder Part Number

FNC | A | C | 58 | B | 10 | S12 | M00 | 30V | B | – | BCC

- **A**: Absolute
- **C**: C: CanOpen PR: Profibus
- **58**: Housing: 58 : 58mm
- **B**: Flange Type: S : Servo flange; B : Clamping flange
- **10**: Shaft diameter : 6, 8, 10; Other dimensions on request
- **S12**: S : Single Turn; 12...19 bit options
- **M00**: M00 : Multiturn; Single turn : 00; Multi turn options : 4, 8, 12, 16, 20, 24, 32
- **30V**: Supply Voltage: 5V : 5Vin / out; 30V : 5-30Vin / out
- **B**: B: Binary
- **BCC**: Electrical Connections: BCC : Bus Cover Cable; BCM : Bus Cover M12 4pin Socket

Absolute encoders - Modular bus covers

Solid shaft with synchro flange
Magnetic single or multiturn encoders

FNC AC 58S Bus Cover Series

Canopen & Profibus

Features

- **Encoder single- or multiturn / bus cover**
- **Magnetic sensing**
- **Single turn Resolution: 12...19 bit**
- **Multi turn 4...32bit**
- **Clamping flange or synchro flange**
- **Permanent check of code continuity**
- **Extreme resistance to shock and vibration**
- **Modular fieldbus interfaces**
- **Profibus / CANopen® /**

Technical data - electrical ratings

Voltage supply	5.5VDC to 30VDC 4.75VDC to 5.5VDC 8VDC to 30VDC
Protection:	Output short circuit protection. Reverse polarity protection
Consumption w/o load	≤50 mA (24 VDC)
Initializing time typ.	170 ms after power on
Interface	Profibus / CANopen® /
Resolution (steps/turn)	9 to 16 bit
Number of revolution	4, 8, 12, 16, 24, 32,
Code	Binary
Code sequence	CW default, programmable
Absolute accuracy	±0,35°
Device adress	Rotary switch in bus cover
Interference immunity	DIN EN 61000-6-2
Emitted interference	DIN EN 61000-6-4
Approval	CE
Programmable parameters	Steps per revolution Number of revolutions Preset Scaling Rotating direction
Diagnostic functions	Position or parameter error Multiturn sensing
Status indicator	RED&GREEN-LED integrated in bus cover

Technical data - mechanical design

Dimensions (flange)	ø58 mm
Shaft loading	≤140 N axial ≤240 N radial
Protection DIN EN 60529	IP54, IP65
Operating speed	≤10000 rpm
Starting torque	≤0.025 Nm (IP 67)
Materials	Housing, Flange : Aluminium Shaft : Stainless steel
Shaft diameter:	6, 8 mm (other diameters on request)
Bearings lifetime:	$2x10^9$ rev. at 100% of full rated shaft load (minimum)
Operating temperature	-25...+90 °C
Weight approx.	400 g
Connection	Bus cover
Relative humidity	95 %
Resistance	DIN EN 60068-2-6 Vibration 30 g, 10-2000 Hz DIN EN 60068-2-27 Shock 200 g, 6 ms

Accessories

Connectors and cables
CRM2312R M23 12 poles female connector or see page 112

Mounting coupling
PF260606 metal coupling or see page 110

Mounting accessories
YY ASTK Spring or see page 108-109

FNC AC 58S Bus Cover Series

Mechanical Dimensions

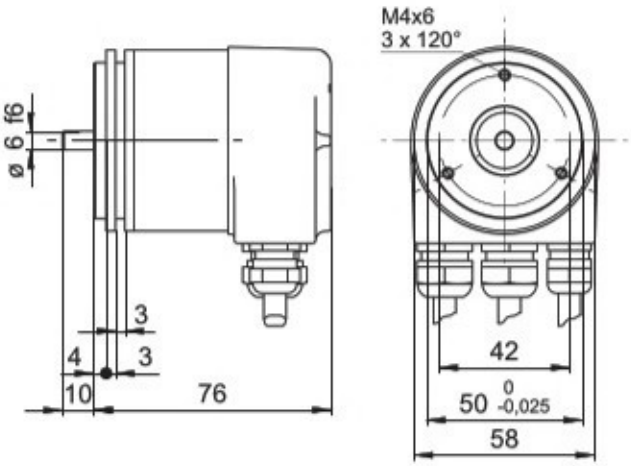

Encoder Part Number

FNC | A | PR | 58 | S | 10 | S12 | M00 | 30V | B | – | BCC

- **A**: Absolute
- **PR**: C: CanOpen PR: Profibus
- **58**: Housing: 58 : 58mm
- **S**: Flange Type: S : Servo flange; B : Clamping flange
- **10**: Shaft diameter : 6, 8, 10; Other dimensions on request
- **S12**: S : Single Turn; 12...19 bit options
- **M00**: M00 : Multiturn; Single turn : 00; Multi turn options : 4, 8, 12, 16, 20, 24, 32
- **30V**: Supply Voltage: 5V : 5Vin / out; 30V : 5-30Vin / out
- **B**: B: Binary
- **BCC**: Electrical Connections: BCC : Bus Cover Cable; BCM : Bus Cover M12 4pin Socket

Absolute encoders - Modular bus covers

End Hollow Shaft
Magnetic single or multiturn encoders

FNC AC 58E Bus Cover Series

Canopen & Profibus

Features

- **Encoder single- or multiturn / bus cover**
- **Magnetic sensing**
- **Single turn Resolution: 12...19 bit**
- **Multi turn 4...32bit**
- **End Hollow Shaft**
- **Permanent check of code continuity**
- **Extreme resistance to shock and vibration**
- **Modular fieldbus interfaces**
- **Profibus / CANopen®**

Technical data - electrical ratings

Voltage supply	5.5VDC to 30VDC 4.75VDC to 5.5VDC 8VDC to 30VDC
Protection:	Output short circuit protection. Reverse polarity protection
Consumption w/o load	≤50 mA (24 VDC)
Initializing time typ.	170 ms after power on
Interface	Profibus / CANopen® /
Resolution (steps/turn)	9 to 16 bit
Number of revolution	4, 8, 12, 16, 24, 32,
Code	Binary
Code sequence	CW default, programmable
Absolute accuracy	±0,35°
Device adress	Rotary switch in bus cover
Interference immunity	DIN EN 61000-6-2
Emitted interference	DIN EN 61000-6-4
Approval	CE
Programmable parameters	Steps per revolution Number of revolutions Preset Scaling Rotating direction
Diagnostic functions	Position or parameter error Multiturn sensing
Status indicator	RED&GREEN-LED integrated in bus cover

Technical data - mechanical design

Dimensions (flange)	ø58 mm
Shaft loading	≤140 N axial ≤240 N radial
Protection DIN EN 60529	IP54, IP65
Operating speed	≤10000 rpm
Starting torque	≤0.025 Nm (IP 67)
Materials	Housing, Flange : Aluminium Shaft : Stainless steel
Shaft diameter:	6, 8 mm (other diameters on request)
Bearings lifetime:	$2x10^9$ rev. at 100% of full rated shaft load (minimum)
Operating temperature	-25...+90 °C
Weight approx.	300 g
Connection	Bus cover
Relative humidity	95 %
Resistance	DIN EN 60068-2-6 Vibration 30 g, 10-2000 Hz DIN EN 60068-2-27 Shock 200 g, 6 ms

Accessories

Connectors and cables
CRM2312R M23 12 poles female connector or see page 112

Mounting coupling
See page 110

Mounting accessories
YY TEO Spring or see page 108-109

FNC AC 58E Bus Cover Series

Mechanical Dimensions

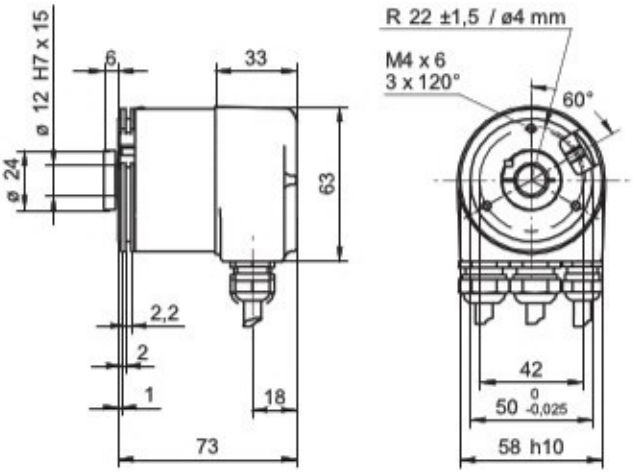

Encoder Part Number

FNC | A | S | 58 | E | 10 | S12 | M00 | 30V | B | – | BCC

- Absolute
- C: CanOpen PR: Profibus
- Housing: 58 : 58mm
- Flange Type: E : End Hollow Shaft
- Shaft diameter : 6, 8, 10 Other dimensions on request
- S : Single Turn 12...19 bit options
- Electrical Connections: BCC : Bus Cover Cable BCM : Bus Cover M12 4pin Socket
- B: Binary
- Supply Voltage: 5V : 5Vin / out 30V : 5-30Vin / out
- M00 : Multiturn Single turn : 00 Multi turn options : 4, 8, 12, 16, 20, 24, 32

Shaft / end shaft encoders

CANopen

View inside bus cover

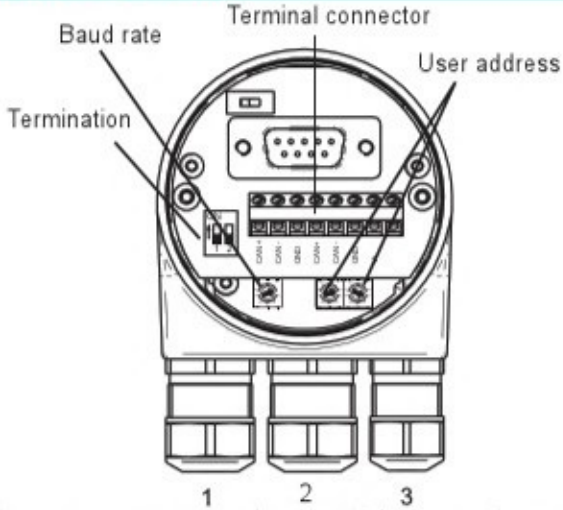

Cable: 1, 2 = ø8-10 mm (-40-85 °C) / ø5-9 mm (-25-85 °C)
Cable: 3 = ø4.5-6 mm (-40-85 °C) / ø3-6 mm (-25-85 °C)

Bus cover

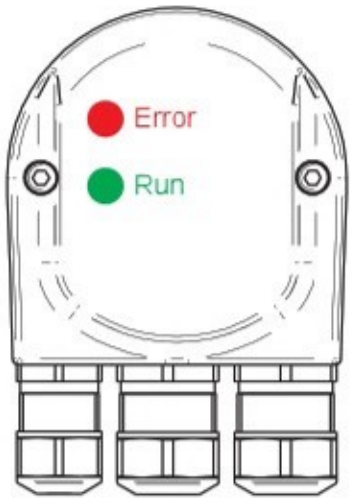

Features - CANopen®

Bus protocol	CANopen®
Device profile	CANopen® - CiA DSP 406, V3.1 (Device Class 2, CAN 2.0A)
Operating mode	Event-triggered Time-triggered Remotely-requested Sync (cyclic) Sync (acyclic)
Preset	Parameter for setting the encoder to a requested position value assigned to a defined shaft position of the system. The offset of encoder zero point and mechanical zero point is stored in the encoder.
Rotating direction	Parameter for defining the rotating direction in which there have to be ascending or descending position values.
Scaling	Parameter defining the steps per turn as well as the total resolution.
Diagnosis	The encoder supports the following error warnings: - Position and parameter error - Lithium battery voltage control (Multiturn)
Node ID monitoring	Heartbeat or Nodeguarding
Default	125 kbit/s, Node ID 1

Terminal assignment

Pin 1	GND	Ground connection relating to UB
Pin 2	UB	Voltage supply 10...30 VDC
Pin 3	GND	Ground connection relating to UB
Pin 4	CAN_H	CAN bus signal (dominant High)
Pin 5	CAN_L	CAN bus signal (dominant Low)

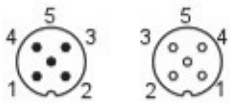

Connector M12 (male / female)
A-coded

User address (identifier)

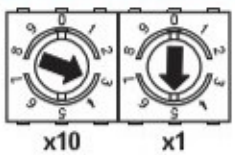

Defined by rotary switch.
Example: User address 35

Termination

ON = final user
OFF = user X

Baud rate

Switch	Baud rate
0	EEPROM Value
1	10 kbps
2	20 kbps
3	50 kbps
4	100 kbps
5	125 kbps
6	250 kbps
7	500 kbps
8	800 kbps
9	1000 kbps

Shaft / end shaft encoders

View inside bus cover

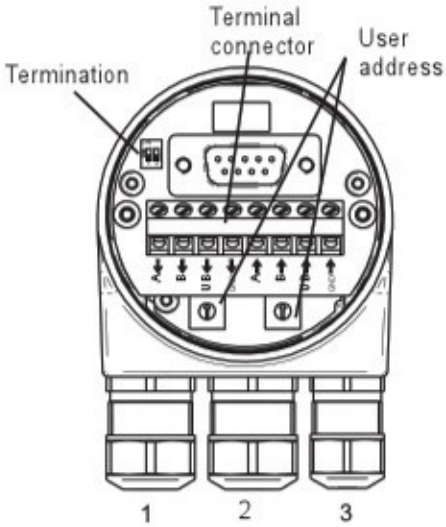

Cable: 1, 2 = ø8-10 mm (-40-85 °C) / ø5-9 mm (-25-85 °C)
Cable: 3 = ø4.5-6 mm (-40-85 °C) / ø3-6 mm (-25-85 °C)

Bus cover

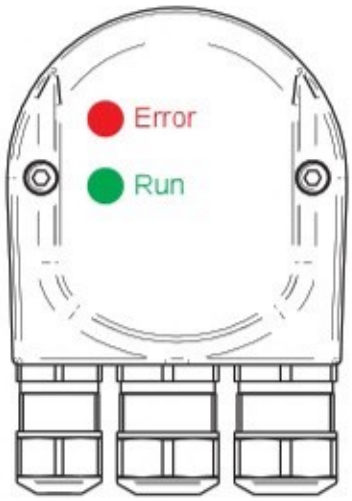

Features - Profibus-DPV0

Bus protocol	Profibus-DPV0
Device profile	Device Class 1 and 2
Cyclic data exchange	Communication in line with DPV0
Input data	Position value. In addition optionally speed signal parametering (output of current rotation speed).
Output data	Preset
Preset	Parameter for setting the encoder to a requested position value assigned to a defined shaft position of the system. Storage non-volatile.
Rotating direction	Parameter for defining the rotating direction in which there have to be ascending or descending position values.
Scaling	Parameter defining the steps per turn as well as the total resolution.
Diagnosis	The encoder supports the following error warnings: - Position and parameter error - Lithium battery voltage control (Multiturn)
Default	User address 00 Termination OFF

Terminal assignment

Connector M12 (male), A-coded

Pin 1	UB	Voltage supply 10...30 VDC
Pin 3	GND	Ground connection relating to UB

Connector M12 (male / female), B-coded

Pin 2	A	Negative data line
Pin 4	B	Positive data line

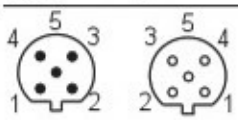

Terminals of the same significance are internally connected and identical in their functions. Max. load on the internal terminal connections UB-UB and GND-GND is 1 A each.

Termination

both ON = final user
both OFF = user X

User address (identifier)

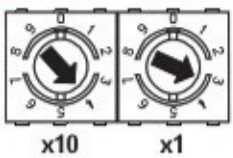

Defined by rotary switch.
Example: User address 43

FNCC 40E 865P
PPR : 2500
VCC : 5VDC
PP : 5P
869 23F 155G01

FENAC Automation Control

Motor feedback encoders

- Quick
- Smooth

Motion Control Products

FNCC 40EF Series

without cover

with cover

Features

- **Industry 40 mm, end or through hollow shaft**
- **Robust Mechanical and Electrical Construction**
- **Protection up to IP67**
- **Up to 5000 PPR max.**
- **2P, 3P, 4P, 5P Pole pairs options**

PPR Options :

1000 - 1024 - 1250 - 2000 - 2048 - 2500 - 5000

Technical data - electrical ratings

Voltage supply	4.75VDC to 30VDC 4.75VDC to 5.5VDC
Protection:	Output short circuit protection. Reverse polarity protection (except 5V version)
Consumption w/o load	≤60 mA (24 VDC)
Resolution (steps/turn)	1...5000
Reference signal	Zero pulse, width 90° 180°, 360° optional
Optoelectronic life time	100.000 (min)
Output frequency	>200 kHz
Output signals	90° shifted A and B, Z + inverted
Output circuit	Linedriver/RS422 Push-pull short-circuit proof
Interference immunity	DIN EN 61000-6-2
Emitted interference	DIN EN 61000-6-4
Approval	CE

Technical data - mechanical design

Dimensions (flange)	ø40 mm
Shaft loading	≤80 N axial ≤100 N radial
Protection DIN EN 60529	IP 67
Operating speed	≤10000 rpm
Starting torque	≤0.025 Nm (IP 67)
Materials	Housing: Aluminium Flange: Aluminium Shaft : Stainless steel
Shaft diameter:	4, 5, 6, 7, 8 mm (other diameters on request)
Bearings lifetime:	$2x10^9$ rev. at 100% of full rated shaft load (minimum)
Operating temperature	-20...+85 °C
Storage temperature	-30 °C up to +90 °C
Weight approx.	250 g

Accessories

Connectors and cables
CRM1212 M12 12 poles female connector or see page 112

Mounting coupling
See page 110

Mounting accessories
YY AKR Spring or see page 108-109

FNCC 40EF Series

Mechanical Dimensions

With cover

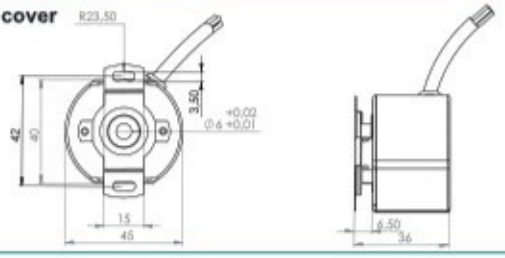

Without cover

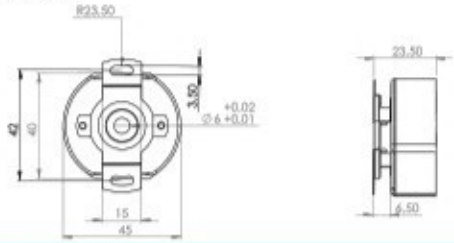

Cable / Connector Wiring

Function	Connector	Color	Renk
+VB	pin 1	Brown	Kahve
GND	pin 2	White	Beyaz
A	pin 3	Green	Yeşil
A'	pin 4	Green-Black	Yeşil-Siyah
B	pin 5	Yellow	Sarı
B'	pin 6	Yellow-Black	Sarı-Siyah
Z	pin 7	Gray	Gri
Z'	pin 8	Gray-Black	Gri-Siyah
U	pin 9	Blue	Mavi
U'	pin 10	Blue-Black	Mavi-Siyah
V	pin 11	Orange	Turuncu
V'	pin 12	Orange-Black	Turuncu-Siyah
W	pin 13	Red	Kırmızı
W'	pin 14	Red-Black	Kırmızı-Siyah
shield	pin 15		

Pulse Diagram

Clockwise rotating direction when looking at flange.

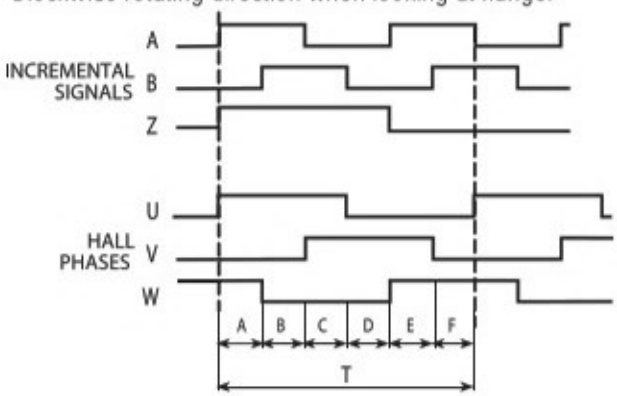

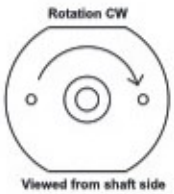

POLES	A / B / C / D / E / F	T
4	30° ±1,5°	180°
6	20° ±1,5°	120°
8	15° ±1,5°	90°

Encoder Part Number

FNCC | 40 | EF | 8 | 6 | 8P | 2500 | 30V | – | R2

Housing:
40 : 40mm

Flange Type:
EF: End hollow shaft optic
HF: Through hollow shaft optic

Shaft diameter : 4, 5, 6, 7, 8 mm
Other dimensions on request

Output Channels
3 : ABZ
6 : ABZ+A' B' Z'

Cable
R2 : Radial 2 mm, Standard ,without cover
R2C : Radial 2m, With cover

Supply Voltage and output circuit :
5V : 5Vin / out
245V : 5-30Vin 5Vout
30V : 5-30Vin / out

PPR Options :
1000 - 1024 - 1250 - 2000 - 2048 - 2500 - 4096 - 5000

Pole pairs
4P : 4 poles, 2 pole pair
6P : 6 poles, 3 pole pair
8P : 8 poles, 4 pole pair
2P : 2 poles, 1 pole pair
10P : 10 poles, 5 pole pair
12P : 12 poles, 6 pole pair

Absolute commutation encoders

Resolution 1...65536 pulses

FNCC 40EFM Series

Features

- **Industry 40 mm, end or through hollow shaft**
- **Robust Mechanical and Electrical Construction**
- **Protection up to IP67**
- **Up to 65536 PPR max.**
- **2P, 3P, 4P, 5P Pole pairs options**

PPR Options :

1000 - 1024 - 1250 - 2000 - 2048 - 2500 - 5000

Technical data - electrical ratings

Voltage supply	4.75VDC to 30VDC 4.75VDC to 5.5VDC
Protection:	Reverse polarity protection (except 5V version)
Consumption w/o load	≤60 mA (24 VDC)
Resolution (steps/turn)	1...65536
Reference signal	Zero pulse, width 90° 180°, 360° optional
Optoelectronic life time	100.000 (min)
Output frequency	>200 kHz
Output signals	90° shifted A and B, Z + inverted
Output circuit	Linedriver/RS422 Push-pull short-circuit proof
Interference immunity	DIN EN 61000-6-2
Emitted interference	DIN EN 61000-6-4
Approval	CE

Technical data - mechanical design

Dimensions (flange)	ø40 mm
Shaft loading	≤80 N axial ≤100 N radial
Protection DIN EN 60529	IP 67
Operating speed	≤10000 rpm
Starting torque	≤0.025 Nm (IP 67)
Materials	Housing: Aluminium Flange: Aluminium Shaft : Stainless steel
Shaft diameter:	4, 5, 6, 7, 8 mm (other diameters on request)
Bearings lifetime:	$2x10^9$ rev. at 100% of full rated shaft load (minimum)
Operating temperature	-20...+85 °C
Storage temperature	-30 °C up to +90 °C
Weight approx.	250 g

Accessories

Connectors and cables
CRM1212 M12 12 poles female connector or see page 64

Mounting coupling
See page 62

Mounting accessories
AKR Spring or see page 60-61

FNCC 40EFM Series

Mechanical Dimensions

Without cover

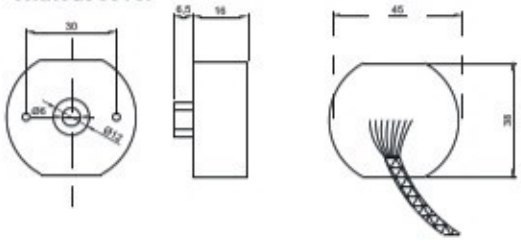

Cable / Connector Wiring

Function	Connector	Color	Renk
+VB	pin 1	Brown	Kahve
GND	pin 2	White	Beyaz
A	pin 3	Green	Yeşil
A'	pin 4	Green-Black	Yeşil-Siyah
B	pin 5	Yellow	Sarı
B'	pin 6	Yellow-Black	Sarı-Siyah
Z	pin 7	Gray	Gri
Z'	pin 8	Gray-Black	Gri-Siyah
U	pin 9	Blue	Mavi
U'	pin 10	Blue-Black	Mavi-Siyah
V	pin 11	Orange	Turuncu
V'	pin 12	Orange-Black	Turuncu-Siyah
W	pin 13	Red	Kırmızı
W'	pin 14	Red-Black	Kırmızı-Siyah
shield	pin 15		

Pulse Diagram

Clockwise rotating direction when looking at flange.

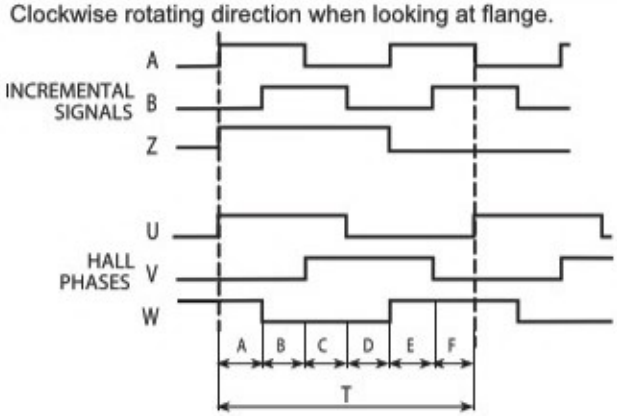

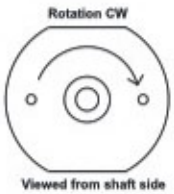

POLES	A / B / C / D / E / F	T
4	30° ±1,5°	180°
6	20° ±1,5°	120°
8	15° ±1,5°	90°

Encoder Part Number

FNCC | 40 | EFM | 8 | 6 | 8P | 2500 | 30V | – | R2

Housing:
40 : 40mm

Flange Type:
EFM : End hollow shaft magnetic

Shaft diameter : 4, 5, 6, 7, 8 mm
Other dimensions on request

Output Channels
3 : ABZ
6 : ABZ + A' B' Z'
: ABZ + UVW
12 : ABZ + A'B'Z' + UVW + U' V' W'

Cable
R2 : radial 2m, shield not connected (standart)

Supply Voltage and output circuit :
5V : 5V in / out
245V : 5-30V in 5V out
30V : 5-30V in / out

PPR Options :
1000 - 1024 - 1250 - 2000 - 2048 - 2500 - 4096 - 5000 - 65536

Pole pairs
0P : No poles, 0 pole pair
4P : 4 poles, 2 pole pair
8P : 8 poles, 4 pole pair
12P : 12 poles, 6 pole pair
16P : 16 poles, 8 pole pair
2P : 2 poles, 1 pole pair
6P : 6 poles, 3 pole pair
10P : 10 poles, 5 pole pair
14P : 14 poles, 7 pole pair
32P : 32 poles, 16 pole pair

FNC SC2048 Series, SinCos motorfeedback

FNC SC2048-R8S8

FNC SC2048-R8S34

FNC SC2048-R8S38

Features

- **Compact robust motor integration design**
- **1Vpp / 1PPR accurate position information**
- **2048 PPR sin cosine accurate speed information**
- **Installation diameter 65mm**
- **1:10 taper shaft**
- **IP67 protection class**

Technical data - mechanical design

Dimensions (flange)	ø56 mm
Clamp mounting diameter	65 mm
Protection DIN EN 60529	IP 67
Operating speed	≤10000 rpm
Starting torque	≤0.03 Nm (IP 67)
Materials	Housing : Aluminium Flange : Aluminium Shaft : Stainless steel
Shaft specs	Taper shaft Ø 9.25 Taper 1:10
Operating temperature	-40...+110 °C
Storage temperature	-40 °C up to +120 °C
Weight approx.	250 g
Approval	CE

Technical data - electrical ratings

Voltage supply	4.75VDC to 5.5VDC
Protection:	Output short circuit protection. Reverse polarity protection
Consumption w/o load	≤120 mA (5 VDC)
Interface, Output	Sine cosine / 1 Vpp
Resolution (steps/turn)	2048
Absolute accuracy	±0.17°
Absolute angle error	0.087°
Output frequency	500 kHz (max.)
Output circuit	1 Vpp incremental Sin/Cos differential driver

FNC SC2048 Series, SinCos motorfeedback

Pulse Diagram

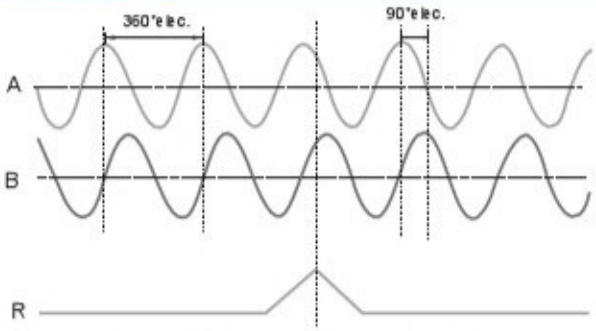

Signals shown at CW rotation with view on shaft's end

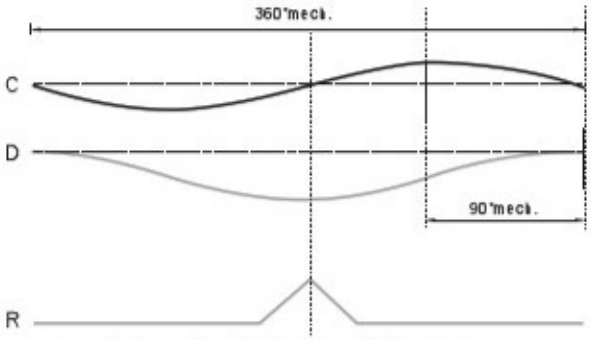

Signals shown at CW rotation with view on shaft's end

Cable / Connector Wiring

Function	Connector	Color	Renk
+VB	pin 1	Brown	Kahve
GND	pin 2	White	Beyaz
A	pin 3	Green	Yeşil
A'	pin 4	Green-Black	Yeşil-Siyah
B	pin 5	Yellow	Sarı
B'	pin 6	Yellow-Black	Sarı-Siyah
C	pin 7	Blue	Mavi
C'	pin 8	Blue-Black	Mavi-Siyah
D	pin 9	Orange	Turuncu
D'	pin 10	Orange-Black	Turuncu-Siyah
Z	pin 11	Gray	Gri
Z'	pin 12	Gray-Black	Gri-Siyah
Shield	Connected to housing		

Encoder Part Number

FNC **SC** — 1 PPR Sine Cosine / 1 turn

2048 — 2048 PPR Sine Cosine / 1 turn

—

R8
- R8 : Radial 8 meter cable
- C8 : Connector with 8 meter cable

CS

Mounting Type
- CS : Clamp Spring
- CH : HH Clamp
- S8 : 8mm Spring
- S34 : 34mm Spring
- S38 : 38mm Spring
- S42 : 42mm Spring

FNC BISS2048 Series, SSI/BISS+SinCos motorfeedback

FNC BISS2048-R8CS

FNC BISS2048-R8S8

FNC BISS2048-R8S34

FNC BISS2048-R8S38

FNC BISS2048-R8S42

Features

- **Compact robust motor integration design**
- **12...19bit SSI/BISS accurate position information**
- **2048 PPR sin cosine accurate speed information**
- **Installation diameter 65mm**
- **1:10 taper shaft**
- **IP67 protection class**

Technical data - mechanical design

Dimensions (flange)	ø56 mm
Clamp mounting diameter	65 mm
Protection DIN EN 60529	IP 67
Operating speed	≤10000 rpm
Starting torque	≤0.03 Nm (IP 67)
Materials	Housing : Aluminium Flange : Aluminium Shaft : Stainless steel
Shaft specs	Taper shaft Ø 9.25 Taper 1:10
Operating temperature	-40...+110 °C
Storage temperature	-40 °C up to +120 °C
Weight approx.	250 g
Approval	CE

Technical data - electrical ratings

Voltage supply	4.75VDC to 5.5VDC
Protection:	Output short circuit protection. Reverse polarity protection
Consumption w/o load	≤120 mA (5 VDC)
Interface, Output	Sine cosine / 1 Vpp
Resolution (steps/turn)	up to 19 bit
Absolute accuracy	±0.17°
Absolute angle error	0.087°
Output frequency	500 kHz (max.)
Output circuit	1 Vpp incremental Sin/Cos differential driver

FNC BISS2048 Series, SSI/BISS+SinCos motorfeedback

Pulse Diagram

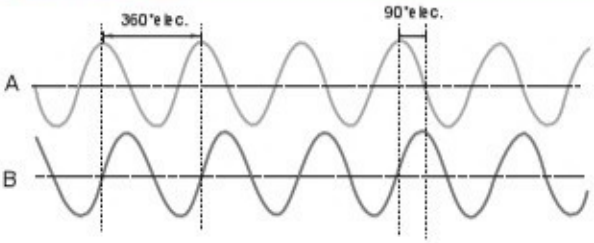

Signals shown at CW rotation with view on shaft's end

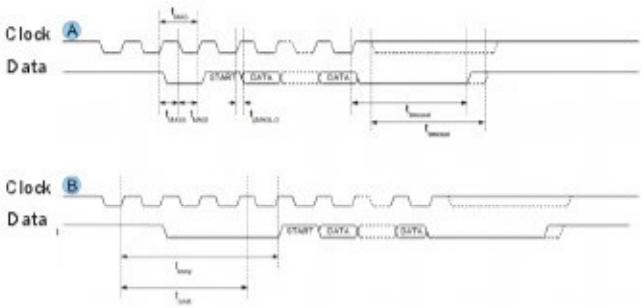

Cable / Connector Wiring

Function	Connector	Color	Renk
+VB	pin 1	Brown	Kahve
GND	pin 2	White	Beyaz
A	pin 3	Green	Yeşil
A'	pin 4	Green-Black	Yeşil-Siyah
B	pin 5	Yellow	Sarı
B'	pin 6	Yellow-Black	Sarı-Siyah
C	pin 7	Blue	Mavi
C'	pin 8	Blue-Black	Mavi-Siyah
D	pin 9	Orange	Turuncu
D'	pin 10	Orange-Black	Turuncu-Siyah
Z	pin 11	Gray	Gri
Z'	pin 12	Gray-Black	Gri-Siyah
Shield	Connected to housing		

Symbol	Parameter	Conditions	Min	Max	Unit
tMAS	Permissible Clock Period	TIMO in accordance	100	2 x ttimeout	ns
tMASh	Clock Signal Hi Level Duration		50	ttimeout	ns
tMASl	Clock Signal Lo Level Duration		50		ns
treq	REQ Lo Level Duration		50	ttimeout	ns

Encoder Part Number

FNC **BISS** **2048** — **R8** **CS**

- BISS: SSI: SSI; BISS: BISS
- 2048: 2048 PPR Sine Cosine / 1 turn
- R8: R8 : Radial 8 meter cable; C8 : Connector with 8 meter cable
- CS: Mounting Type
  - CS : Clamp Spring
  - S8 : 8mm Spring
  - S34 : 34mm Spring
  - S38 : 38mm Spring
  - S42 : 42mm Spring


A
B
1
2
Programmable Multiturn
Analog Encoder

FENAC Automation Control

Absolute analog encoders

- Smart
- Easy

Motion Control Products

FNC MT Programmable Analog Output

Features

- **Programmable measuring range**
- **Industry 58 mm end hollow shaft version**
- **Robust mechanical and electrical construction**
- **Protection up to IP67**
- **0-10V voltage / 4-20mA current output**

Output Options :

Programmable;

- **0-10VDC Voltage**
- **0-5VDC Voltage**
- **4-20mA current**

Technical data - electrical ratings

Voltage supply	10-30VDC
Protection:	Output short circuit protection. Reverse polarity protection
Consumption w/o load	≤60 mA (24 VDC)
Output signals	0-10VDC Voltage output 0-5VDC Voltage output 4-20mA current output
Measuring range	up to 65536 revolution
Interference immunity	DIN EN 61000-6-2
Emitted interference	DIN EN 61000-6-4
Approval	CE

Technical data - mechanical design

Dimensions (flange)	ø58 mm
Shaft loading	≤140 N axial ≤240 N radial
Protection DIN EN 60529	IP54, IP65
Operating speed	≤10000 rpm
Starting torque	≤0.025 Nm (IP 65)
Materials	Housing: Aluminium Flange: Aluminium Shaft : Stainless steel
Shaft/Hollow shaft diameter:	6, 8, 10, 12 mm (other diameters on request)
Bearings lifetime:	$2x10^9$ rev. at 100% of full rated shaft load (minimum)
Operating temperature	-20...+85 °C
Storage temperature	-30 °C up to +90 °C
Weight approx.	250 g

Pulse Diagram

Example: 128 revolution current output.

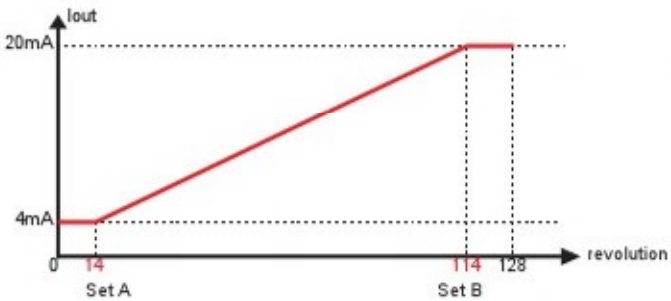

Accessories

Connectors and cables
CRM1205 M12 4 poles female connector or see page 112

Mounting coupling
PF481010 plastic or see page 110

Mounting accessories
SF58B square flange or see page 108-109

FNC MT Analog Output

Mechanical Dimensions

58B

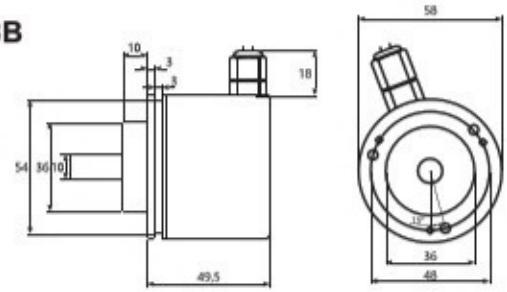

58S

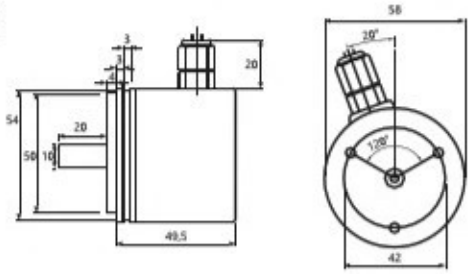

58E

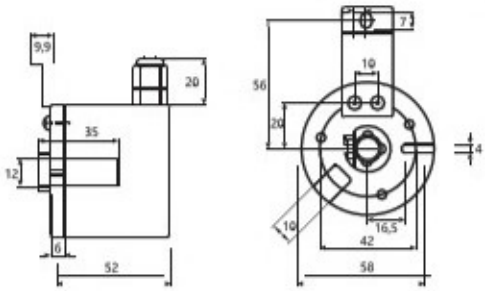

Cable Wiring

Function	Color	Renk	Explanation
+VB	Brown	Kahve	Supply voltage
GND	White	Beyaz	Ground
V	Green	Yeşil	Voltage output
A	Red	Kırmızı	Current output

Connector Wiring

Connector Type	Analog Output	+VDC	GND	SET1	SET2
CRM1205	1	2	3	4	5

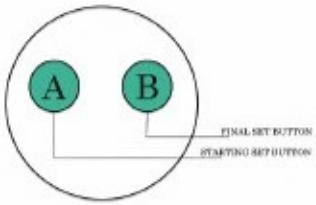

Encoder Part Number

FNC **P** **A** **A** **58** **B** **10** **M8** **C1** **30V** – **CRM1205**

- **P** – Programmable
- **A** – Absolute
- **A** – Analog
- **58** – Housing : 58mm
- **B** – Flange Type:
  E : End hollow shaft
  B : Shaft clamping flange
  S : Servo flange
- **10** – Shaft diameter : 4, 6, 8, 10, 12, 14
  Other dimensions on request
- **M8** – Multiturn
  4, 8, 12, 16, 20, 24, 32 bit
- **C1** – Output type :
  C1 : 4-20mA
  V1 : 0-10V
  V2 : 1-5V
- **30V** – Supply Voltage:
  5 : 5V in/out 30 : 5 - 30V in/out
- **CRM1205** – Electrical Connections:
  Cable
  R2 : radial 2m, shield not connected (standart)
  A2 : axial 2m, shield not connected (standart)
  CRM1205 : M12 5pin connector

FNC ST Analog Output

50 mm & 58 mm Housing

Features

- **Industry 58 mm shaft version**
- **Industry 58 mm end hollow shaft version**
- **Robust mechanical and electrical construction**
- **Protection up to IP67**
- **0-10V voltage / 4-20mA current output versus position**

Output Options :

- **0-10VDC Voltage**
- **0-5VDC Voltage**
- **4-20mA current**

Technical data - electrical ratings

Voltage supply	10-30VDC
Protection:	Output short circuit protection. Reverse polarity protection
Consumption w/o load	≤60 mA (24 VDC)
Output signals	0-10VDC Voltage output 1-5VDC Voltage output 4-20mA current output
Resolution	up to 16 bit
Interference immunity	DIN EN 61000-6-2
Emitted interference	DIN EN 61000-6-4
Approval	CE

Technical data - mechanical design

Dimensions (flange)	ø58 mm
Shaft loading	≤140 N axial ≤240 N radial
Protection DIN EN 60529	IP54, IP65
Operating speed	≤10000 rpm
Starting torque	≤0.025 Nm (IP 67)
Materials	Housing: Aluminium Flange: Aluminium Shaft : Stainless steel
Shaft/Hollow shaft diameter:	6, 8, 10, 12 mm (other diameters on request)
Bearings lifetime:	$2x10^9$ rev. at 100% of full rated shaft load (minimum)
Operating temperature	-20...+85 °C
Storage temperature	-30 °C up to +90 °C
Weight approx.	250 g

Pulse Diagram

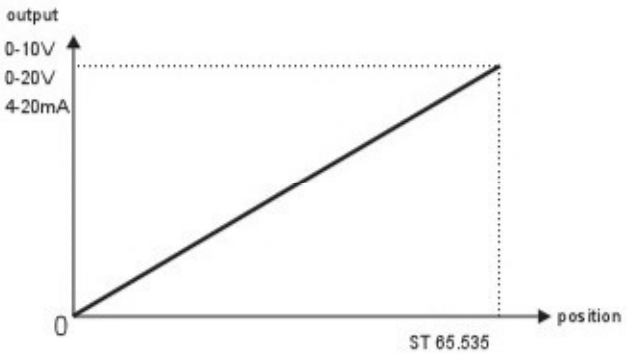

Accessories

Connectors and cables
CRM1205 M12 4 poles female connector or see page 112

Mounting coupling
PF481010 plastic or see page 110

Mounting accessories
SF58B square flange or see page 108-109

FNC ST Analog Output

Mechanical Dimensions

58B

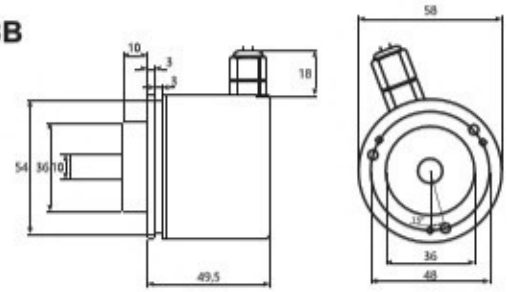

58S

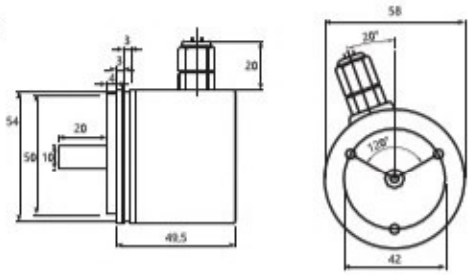

58E

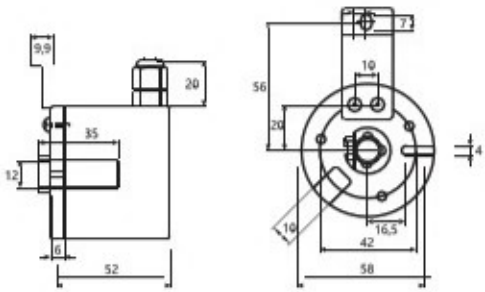

Cable Wiring

Function	Color	Renk	Explanation
+VB	Brown	Kahve	Supply voltage
GND	White	Beyaz	Ground
V	Green	Yeşil	Voltage output
A	Red	Kırmızı	Current output

Connector Wiring

Connector Type	+Vcc	GND	V	A	NC
CRM1204	1	2	3	4	
CRM1205	1	2	3	4	5

Encoder Part Number

FNC | AA | 58 | B | 10 — C1 | P00 | 30V – R2

AA : Absulute Analog

Housing:
50 : 50mm
58 : 58mm

Flange Type:
E : End hollow shaft
B : Shaft clamping flange
S : Servo flange

Shaft diameter : 4, 6, 8, 10, 12, 14
Other dimensions on request

Electrical Connections:
Cable
R2 : radial 2m, shield not connected (standart)
A2 : axial 2m, shield not connected (standart)
CRM1205 : M12 5pin connector

Supply Voltage:
5V : 5V in/out 30V : 5-30V in/out

Output position
P00 : 360° position angle
P180 : 180° position angle
P90 : 90° position angle

Output type
C1 : 4-20mA current
C2 : 0-20 mA current
V1 : 0-10V voltage
V2 : 0-5V voltage

FNC Tacho Analog Output Versus Speed 50 mm & 58 mm Housing

Features

- Industry 58 mm shaft version
- Industry 58 mm end hollow shaft version
- Robust mechanical and electrical construction
- Protection up to IP67
- 0-10V voltage / 4-20mA current output versus speed

Output Options :

- 0-10VDC Voltage
- 0-5VDC Voltage
- 4-20mA current

Technical data - electrical ratings

Voltage supply	10-30VDC
Protection:	Output short circuit protection. Reverse polarity protection
Consumption w/o load	≤60 mA (24 VDC)
Output signals	0-10VDC Voltage output 0-5VDC Voltage output 4-20mA current output
Measuring range	up to 6000 rpm
Interference immunity	DIN EN 61000-6-2
Emitted interference	DIN EN 61000-6-4
Approval	CE

Technical data - mechanical design

Dimensions (flange)	ø58 mm
Shaft loading	≤140 N axial ≤240 N radial
Protection DIN EN 60529	IP54, IP65
Operating speed	≤10000 rpm
Starting torque	≤0.025 Nm (IP 67)
Materials	Housing: Aluminium Flange: Aluminium Shaft : Stainless steel
Shaft/Hollow shaft diameter:	6, 8, 10, 12 mm (other diameters on request)
Bearings lifetime:	$2x10^9$ rev. at 100% of full rated shaft load (minimum)
Operating temperature	-20...+85 °C
Storage temperature	-30 °C up to +90 °C
Weight approx.	250 g

Pulse Diagram

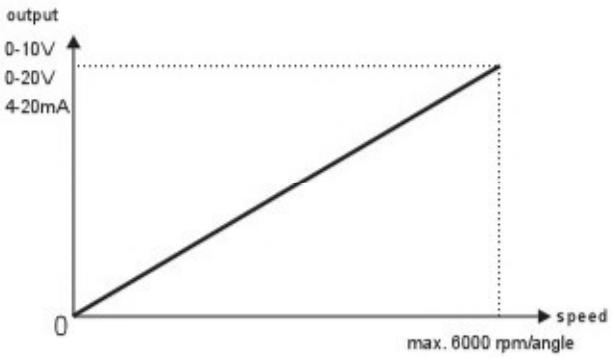

Accessories

Connectors and cables
CRM1205 M12 4 poles female connector or see page 112

Mounting coupling
PF481010 plastic or see page 110

Mounting accessories
SF58B square flange or see page 108-109

FNC Tacho Analog Output Versus Speed

Mechanical Dimensions

58B

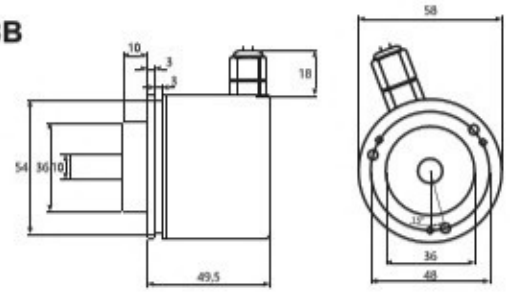

58S

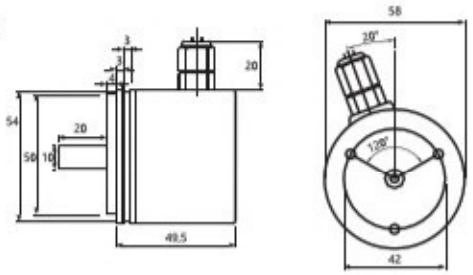

58E

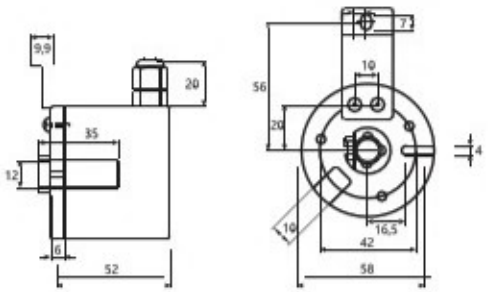

Cable Wiring

Function	Color	Renk	Explanation
+VB	Brown	Kahve	Supply voltage
GND	White	Beyaz	Ground
V	Green	Yeşil	Voltage output
A	Red	Kırmızı	Current output

Connector Wiring

Connector Type	+Vcc	GND	V	A	NC
CRM1204	1	2	3	4	
CRM1205	1	2	3	4	5

Encoder Part Number

FNC | T | 58 | B | 8 | C1 | T15 | 30V | – | R2

Housing:
58 : 58mm

Housing:
50 : 50mm 58 : 58mm

Flange Type:
E : End hollow shaft
B : Shaft clamping flange
S : Servo flange

Shaft diameter : 4, 6, 8, 10, 12, 14
Other dimensions on request

Output type :
C1 : 4-20mA
V1 : 0-10V
V2 : 0-5V

Electrical Connections:
Cable
R2 : radial 2m, shield not connected (standart)
A2 : axial 2m, shield not connected (standart)
CRM1205 : M12 5pin connector

Supply Voltage:
5: 5V in/out 30: 5-30V in/out

Output speed
T60 : Tacho max 6000 rpm
T30 : Tacho max 3000 rpm
T15 : Tacho max 1500 rpm
T960 : Tacho max 0-10V/ 960 rpm

FENAC Automation Control

Linear Solutions

- Lineertiy
- Output Variety
- Compact Size

Motion Control Products

FNC TPD Wheel Series

Features

- Suitable for measuring the length and speed of the moving target by selecting wheel type
- Successively by wheel type is suitable for measuring the length or speed of the moving target.
- Distance measurement output wavelength and it conforms to the international measurement
- Different wheel diameters and surface options depending on the application
- Protection up to IP65 or IP54
- Easy Mounting
- <300 kHz frequency

Technical data - electrical ratings

Voltage supply	4.75VDC to 30VDC 4.75VDC to 5.5VDC
Protection:	Output short circuit protection. Reverse polarity protection (except 5V version)
Consumption w/o load	≤60 mA (24 VDC)
Reference signal	Zero pulse, width 90° 180°, 360° optional
Output frequency	>200 kHz
Output signals	90° shifted A and B, Z + inverted
Output circuit	Linedriver/RS422 Push-pull short-circuit proof
Interference immunity	DIN EN 61000-6-2
Emitted interference	DIN EN 61000-6-4
Approval	CE

Technical data - mechanical design

Protection DIN EN 60529	IP54, IP65
Operating speed	≤10000 rpm
Starting torque	≤0.020 Nm (IP 67)
Operating temperature	-20...+85 °C
Storage temperature	-30 °C up to +90 °C
Weight approx.	650 g

Accessories

Connectors and cables
M12 4 poles , M15 8 poles and for
other connector options see page 112

Resolution

Resolution:

For 250 mm Circumference Wheels

0,1 = 1PPR = 0,1 mm	= 2500	PPR Encoder
1 = 1PPR = 1 mm	= 250	PPR Encoder
2 = 1PPR = 2 mm	= 125	PPR Encoder
5 = 1PPR = 5 mm	= 50	PPR Encoder
10 = 1PPR = 10 mm (1 cm)	= 25	PPR Encoder

For 200 mm Circumference Wheels

2 = 1PPR = 2 mm	= 100	PPR Encoder
100 = 1PPR = 100 mm (10 cm)	= 2	PPR Encoder

FNC TPD Wheel Series

Mechanical Dimensions

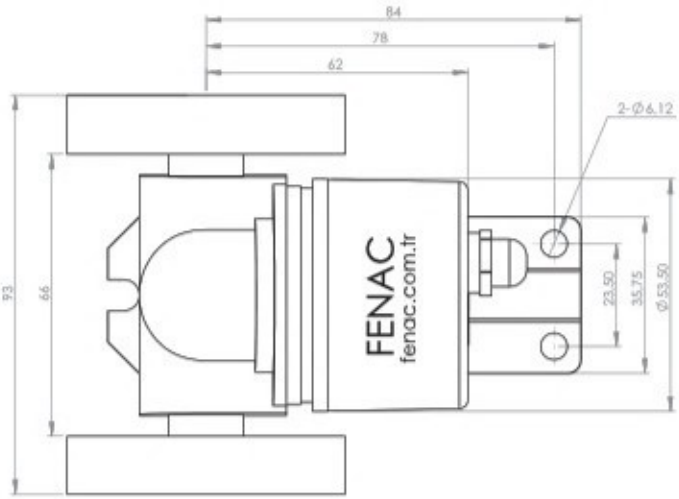

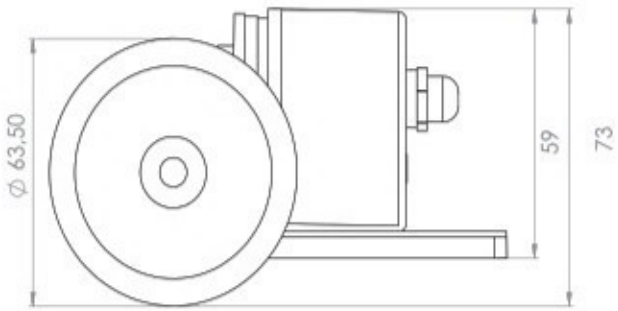

Pulse Diagram

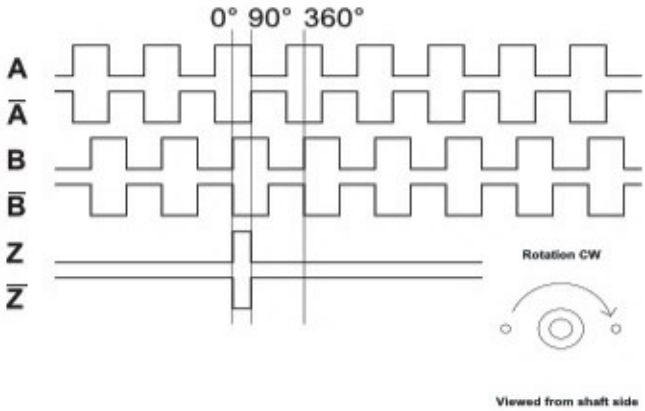

Cable Wiring

Function	Color	Renk	Explanation
+VB	Brown	Kahve	Supply Voltage
GND	White	Beyaz	Ground
A	Green	Yeşil	A Channel
A'	Red	Kırmızı	A Inverted Channel
B	Yellow	Sarı	B Channel
B'	Pink	Pembe	B Inverted Channel
Z	Gray	Gri	Z Channel
Z'	Blue	Mavi	Z Inverted Channel
Shield	Black	Siyah	Shield

Encoder Part Number

FNC | TPD | 25 | 1

PD: Plastic Flat Surface

Wheel Circumference

20: 200 mm
25: 250 mm
30: 300 mm
50: 500 mm

Resolution:

For 250 mm Circumference Wheels

0,1 = 1PPR = 0,1 mm = 2500 PPR Encoder
1 = 1PPR = 1 mm = 250 PPR Encoder
2 = 1PPR = 2 mm = 125 PPR Encoder
5 = 1PPR = 5 mm = 50 PPR Encoder
10 = 1PPR = 10 mm (1 cm) = 25 PPR Encoder

For 200 mm Circumference Wheels

2 = 1PPR = 2 mm = 100 PPR Encoder
100 = 1PPR = 100 mm (10 cm) = 2 PPR Encoder

For All TPD Models;
5-30VDC, Push Pull Out, A-B Channel

FNC WMS Measuring System

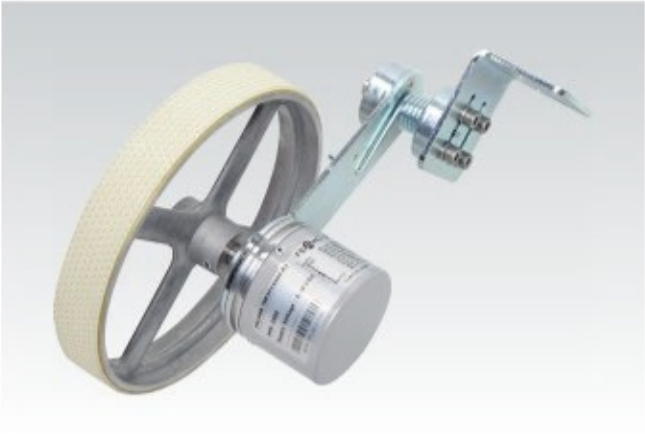

Features

- **Industry 58 mm standart size, clamping flange**
- **Robust mechanical and electrical construction**
- **Protection to IP67**
- **Up to 25.000 PPR max.**
- **<300 kHz frequency**

PPR Options :

1 to 128 - 25 - 50 - 100 - 200 - 250 - 300 - 360 - 400 - 500 - 512 - 600 - 720 - 800 - 900 - 1000 - 1024 - 1250 - 1440 - 2000 - 2048 - 2500 - 3000 - 3600 - 4000 - 4096 - 5000 - 6000 - 8192 - 10000 - 12500 - 16384 - 20000 - 25000

Technical data - electrical ratings

Voltage supply	4.75VDC to 30VDC 4.75VDC to 5.5VDC
Protection:	Output short circuit protection. Reverse polarity protection (except 5V version)
Consumption w/o load	≤60 mA (24 VDC)
Resolution (steps/turn)	1...25.000
Reference signal	Zero pulse, width 90° 180°, 360° optional
Optoelectronic life time	100.000 (min)
Output frequency	>200 kHz
Output signals	90° shifted A and B, Z + inverted
Output circuit	Linedriver/RS422 Push-pull short-circuit proof
Interference immunity	DIN EN 61000-6-2
Emitted interference	DIN EN 61000-6-4
Approval	CE

Technical data - mechanical design

Dimensions (flange)	ø58 mm
Shaft loading	≤140 N axial ≤240 N radial
Protection DIN EN 60529	IP 67
Operating speed	≤10000 rpm
Starting torque	≤0.025 Nm (IP 67)
Materials	Housing: Aluminium Flange: Aluminium Shaft : Stainless steel
Shaft diameter:	6, 8, 10, 12 mm (other diameters on request)
Bearings lifetime:	$2x10^9$ rev. at 100% of full rated shaft load (minimum)
Operating temperature	-20...+85 °C
Storage temperature	-30 °C up to +90 °C
Weight approx.	250 g

Accessories

Connectors and cables
CRM2312 M23 12 poles female connector or see page 68

Mounting coupling
PF481010 plastic or see page 66

Mounting accessories
SF58B square flange or see page 67

Wheeels view

Drawing

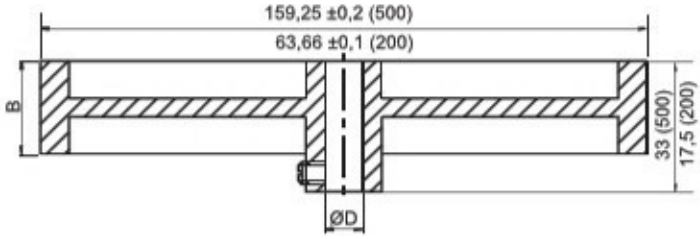

Housing	Circumference	Hole D	Surface	Width	Order Code
Aluminium	200	10	Metal	12	**FC200KR10**
Aluminium	200	6	Plastics	12	**FC200KR06**
Aluminium	500	10	Metal	25	**FC500KR10**
Aluminium	500	6	Plastics	25	**FC500KR06**

FNCSA100
Spring lever for length determination

- For encoder FNC 58B
- Variable installation from below, from above, horizontal, vertical

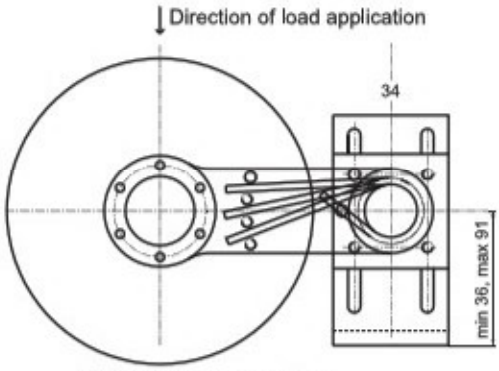

Spring lever, cross section

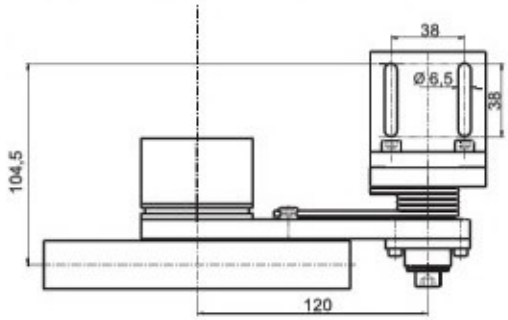

Order Codes :

1 - Encoder : FNC 58B 10630V1000-R2 (Different PPR can be selected)
2 - Spring Lever : FNC SA100
3 - Wheel : FC500KR10 or FC200KR10

FLM Linear Magnetic Sensors

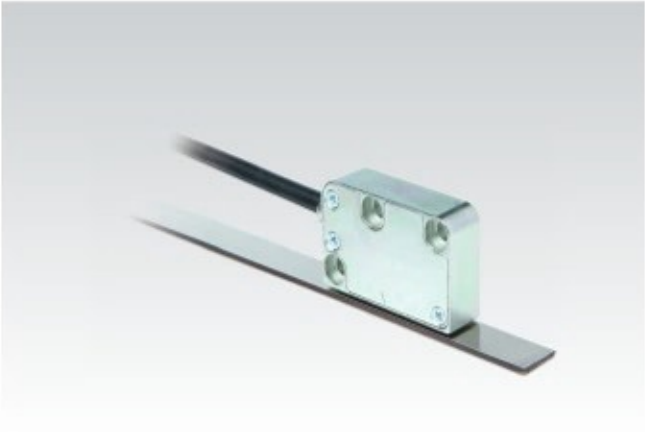

Features

- **Resolution up to 0,001 mm**
- **Robust mechanical and electrical construction**
- **Protection to IP67**
- **Periodic reference signal.**
- **Magnetic Tape FMTL500 (Linear), FMTR500 (Rotary)**
- **Magnetic Tape FMTL200 (Linear), FMTR200 (Rotary)**

Resolution Options :

2.5, 5, 10, 12.5, 20, 25, 40, 50, 80, 100, 200um for 5 mm tape
0.5, 1, 2, 4, 5, 8, 10, 16, 20, 25, 40, 50, 80um for 2 mm tape

Technical data - electrical ratings

Voltage supply	4.75VDC to 30VDC 4.75VDC to 5.5VDC
Protection:	Output short circuit protection. Reverse polarity protection (except 5V version)
Consumption w/o load	≤60 mA (24 VDC)
Resolution	See part number selection
Reference signal	Zero pulse, width 90° 180°, 360° optional
Output signals	90° shifted A and B, Z + inverted
Output circuit	Linedriver/RS422 Push-pull short-circuit proof
Interference immunity	DIN EN 61000-6-2
Emitted interference	DIN EN 61000-6-4
Approval	CE

Technical data - mechanical design

Sensor/tape reading distance	0.1...2mm
Pole Length	5mm for FMTL500 tape 2mm for FMTL200 tape
Protection DIN EN 60529	IP 67
Travel speed	≤10000 rpm
Starting torque	≤0.025 Nm (IP 67)
Materials	Housing: Zinc die cast
System accuracy	±0.025mm for linear ±1°
Repead	±10um
Operating temperature	-10...+70 °C
Storage temperature	-30 °C up to +70 °C
Weight approx.	250 g

FLM Linear Magnetic Sensors

Mechanical Dimensions

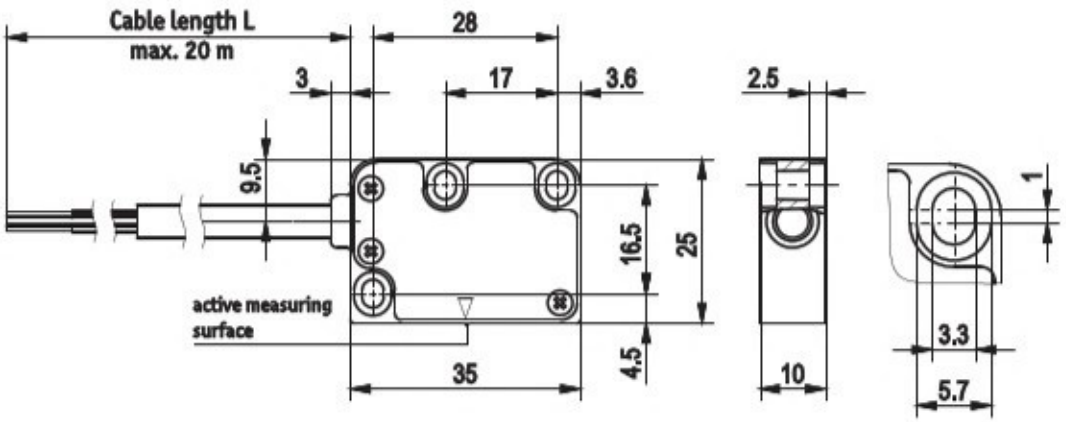

Pulse Diagram

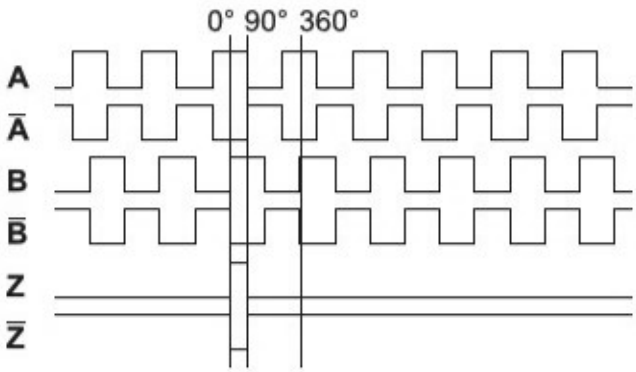

Cable Wiring

Function	Color	Renk	Explanation
+VB	Brown	Kahve	Supply Voltage
GND	White	Beyaz	Ground
A	Green	Yeşil	A Channel
A'	Red	Kırmızı	A Inverted Channel
B	Yellow	Sarı	B Channel
B'	Pink	Pembe	B Inverted Channel
Z	Gray	Gri	Z Channel
Z'	Blue	Mavi	Z Inverted Channel
Shield	Black	Siyah	Shield

Encoder Part Number

FLM | 5 | 005 | 2 | 30V | – | R2

Tape Type:
5 : 5mm width tape
2 : 5mm width tape

Resolution : 0.005mm / 5um
Options :
2.5, 5, 10, 12.5, 20, 25, 40, 50, 80, 100, 200um for 5 mm tape
0.5, 1, 2, 4, 5, 8, 10, 16, 20, 25, 40, 50, 80um for 2 mm tape

Output Channels
1 : A
2 : AB
3 : ABZ
4 : AB+A' B'
6 : ABZ+A' B' Z'

Electrical Connections:
Cable
R2 : radial 2m, shield not connected (standart)

Supply Voltage and output circuit :
5V : 5V in / out
245V : 5-30V in 5V out
30V : 5-30V in / out

FEMAC Automation Control

Draw Wire Sensors

- **Robustness**
- **Ergonomic Design**

Motion Control Products

Fenac Draw-Wire Sensor

Length up to 1000 mm

FNC W55 Series

Features

- Measurement length up to 1000 mm
- Robust aluminium housing
- Very compact design
- Protection to IP54
- Wire-actuated ancoder for all rotary encoders with 58mm servo flange and different signal outputs
- Stainless steel wire

Technical data

Measuring range		0 - 1000mm
Resolution		customer spesific
Sensor element		Incremental, analog, absolute, CANopen etc.
Temperature range		20 °C ..... +80 °C
Material:	housing:	aluminium
	draw-wire:	7x7 pvc coated 304 stainless steel (Ø 0.8mm)
Wire acceleration		approx. 5g
Wire rectraction		approx. 1N
Wire extension		1,5N
Protection class		IP54
Max speed		2m/s

Part number

FNC W 55 – 1000

W: Draw wire sensor

Length:

600:	600mm
700:	700mm
800:	800 mm
900:	900 mm
1000:	1000mm

Mechanical dimensions

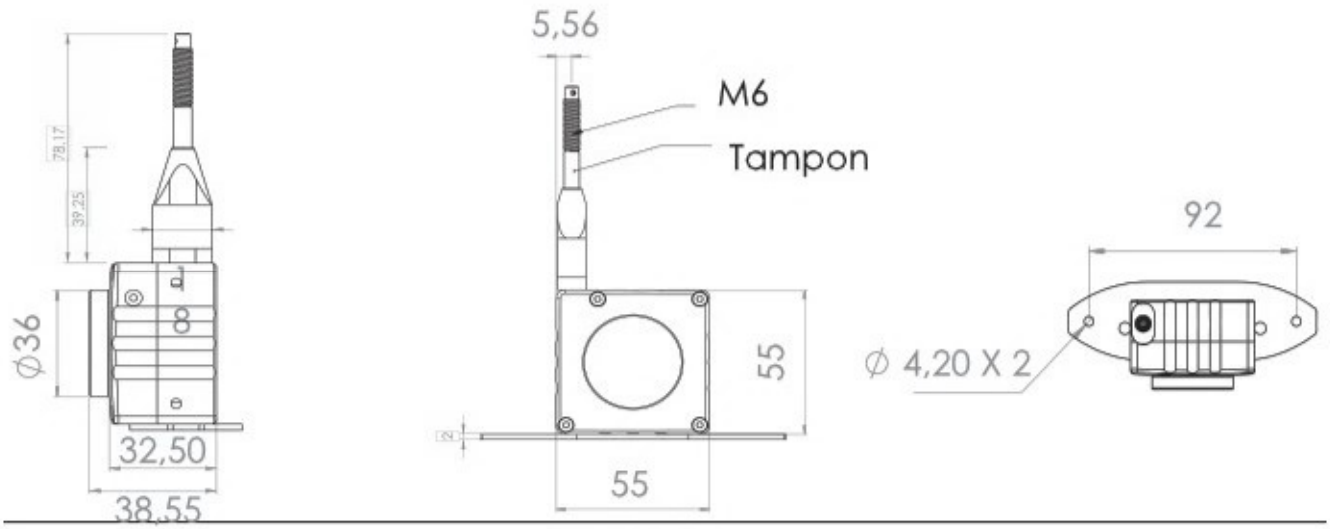

FNC W80 Series

Features

- Measurement length up to 5500mm
- Robust aluminium housing
- Very compact design
- Protection to IP54
- Wire-actuated ancoder for all rotary encoders with 58mm servo flange and different signal outputs
- Stainless steel wire

Technical data

Measuring range		0 - 5500mm
Resolution		customer spesific
Sensor element		Incremental, analog, absolute, CANopen etc.
Temperature range		20 °C ..... +80 °C
Material:	housing:	aluminium
	draw-wire:	7x7 pvc coated 304 stainless steel (Ø 0.8mm - 1 mm)
Wire acceleration		approx. 5g
Wire rectraction		approx. 1N
Wire extension		1,5N
Protection class		IP54
Max speed		2m/s

Part number

FNC W 80 – 5500

W: Draw wire sensor

Length:
1000 : 1000 mm
2000 : 2000 mm
3000 : 3000 mm
5500 : 5500 mm

Mechanical dimensions

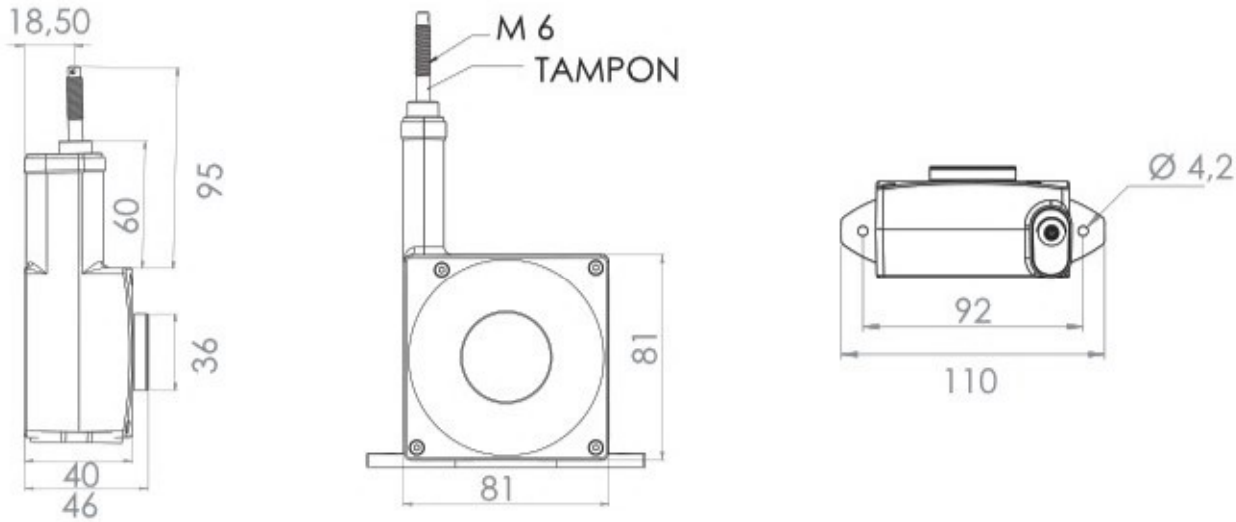

Fenac Draw-Wire Sensor

Length up to 10000 mm

FNC W100 Series

Features

- Measurement length up to 10000 mm
- Robust aluminium housing
- Very compact design
- Protection to IP54
- Wire-actuated ancoder for all rotary encoders with 58mm servo flange and different signal outputs
- Stainless steel wire

Technical data

Measuring range		0 - 10000mm
Resolution		customer spesific
Sensor element		Incremental, analog, absolute, CANopen etc.
Temperature range		20 °C ..... +80 °C
Material:	housing:	aluminium
	draw-wire:	7x7 pvc coated 304 stainless steel (Ø 1 mm)
Wire acceleration		approx. 5g
Wire rectraction		approx. 1N
Wire extension		1,5N
Protection class		IP54
Max speed		2m/s

Part number

FNC | W | 100 – 10000

W: Draw wire sensor

Length:

600: 600mm
700: 700mm
800: 800 mm
900: 900 mm
1000: 1000mm
...
10000: 10000mm

Mechanical dimensions

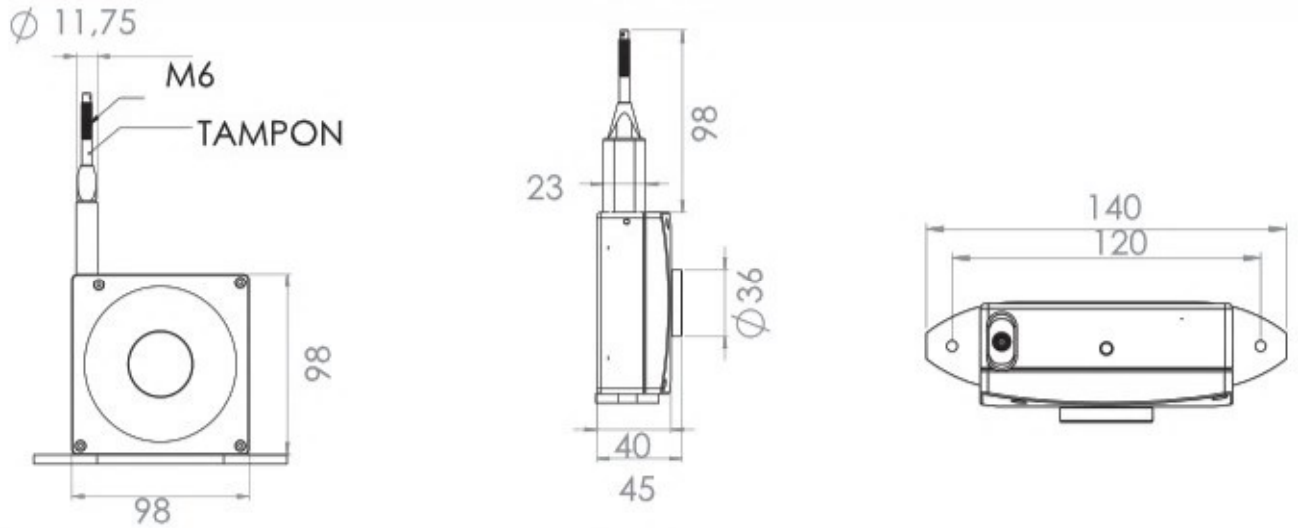

Fenac Draw-Wire Sensor

Length up to 15000 mm

FNC W115 Series

Features

- **Measurement length up to 15000 mm**
- **Robust aluminium housing**
- **Very compact design**
- **Protection to IP54**
- **Wire-actuated ancoder for all rotary encoders with 58mm servo flange and different signal outputs**
- **Stainless steel wire**

Technical data

Measuring range		0 - 15000mm
Resolution		customer spesific
Sensor element		Incremental, analog, absolute, CANopen etc.
Temperature range		20 °C ..... +80 °C
Material:	housing:	aluminium
	draw-wire:	7x7 pvc coated 304 stainless steel (Ø 1 mm)
Wire acceleration		approx. 5g
Wire rectraction		approx. 1N
Wire extension		1,5N
Protection class		IP54
Max speed		2m/s

Part number

FNC **W** **115** – **15000**

W: Draw wire sensor

15000 — **Length:**

600:	600mm
700:	700mm
800:	800 mm
900:	900 mm
1000:	1000mm
...	
15000:	15000mm

Mechanical dimensions

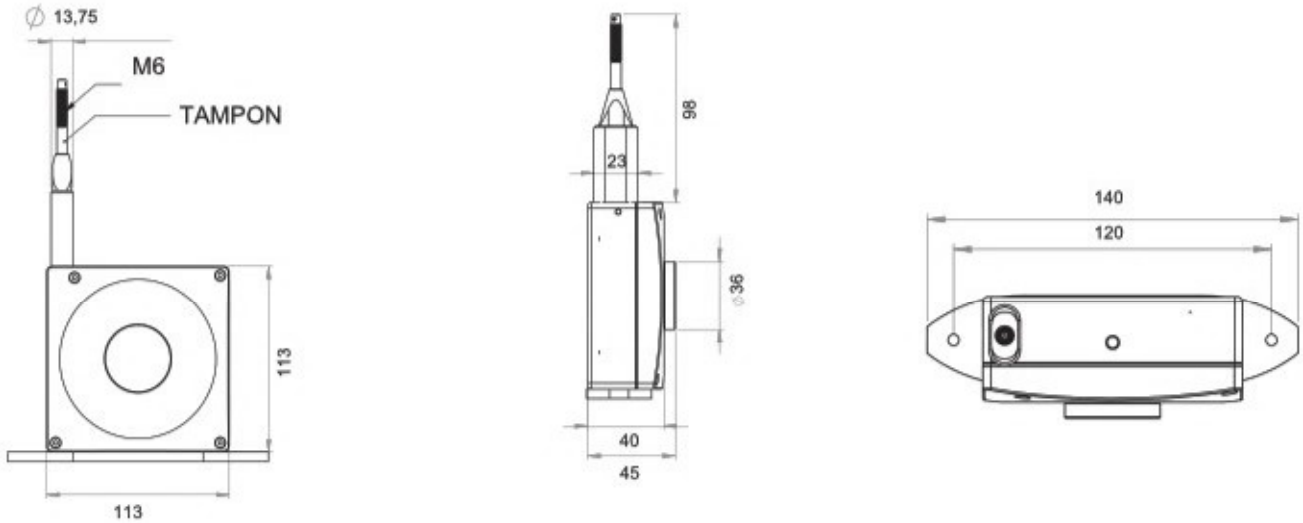

FNC W115 Series

Mounting options

W110 + FNC 58S 6630V 1250 - R2

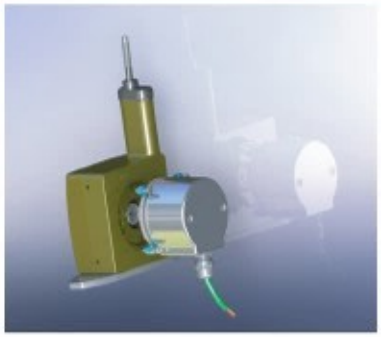

Wire length versus PPR

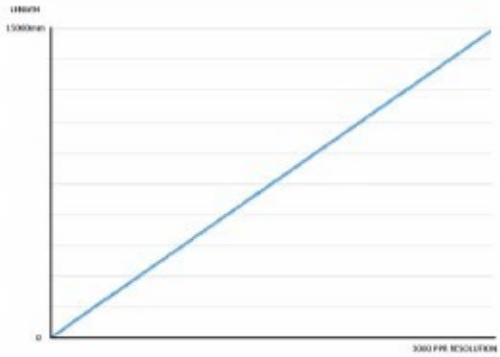

W115 + FNCPAA5 58S 6 M4 V1 30V - R2

Wire length versus voltage or current

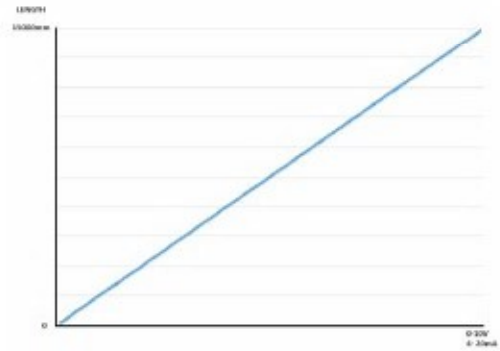

W115 + FNC AP 58S 6 S12M12 30V B BCC

Wire length versus can or profibus position data

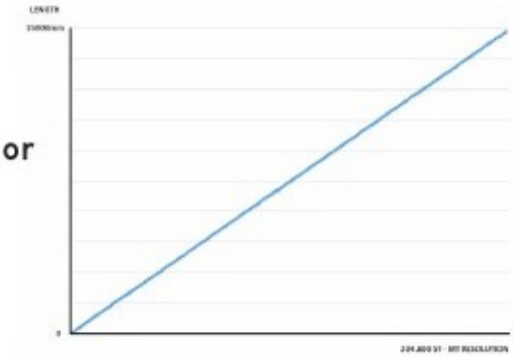

W115 + FNC AS 58S 6 S12 30V B -R2

Wire length versus SSI position data

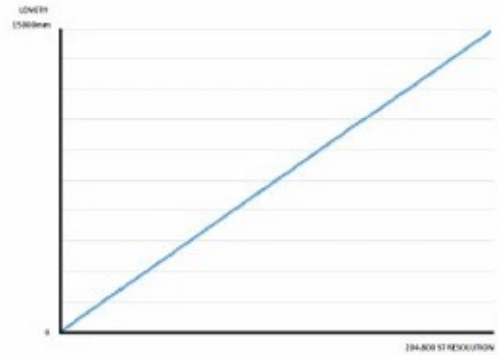

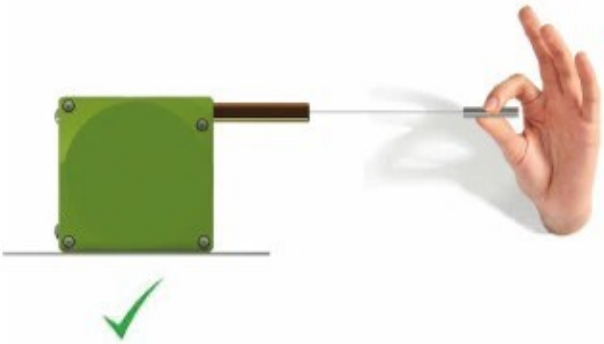

Never allow the measurement cable to retract in an uncontrolled manner. Releasing a tensioned cable will break the device. Risk of injury!

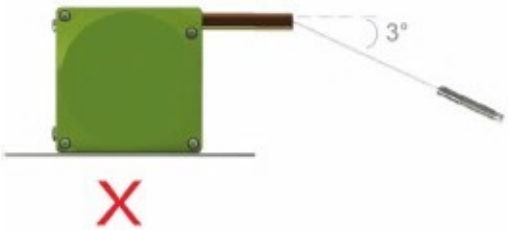

An extension angle of up to 3° is possible but not recommended. The service life may be reduced.

Extending the cable in a straight line is ideal. This can be achieved with a guide pulley if necessary.

If there is no risk of ice forming on the measurement cable, then the cable outlet can be positioned horizontally. However, the cable outlet should be mounted at the bottom.

If there is a risk of ice forming on the measurement cable, a guide pulley must be used in order to break up the ice. The cable outlet must always face downward. This arrangement is always preferable wherever moisture or dust may accumulate on the measurement cable.

FENAC Automation Control

Textile Solutions

- **Fast Solution**
- **Fast Replacement**
- **Easy Maintenance**

Motion Control Products

Incremental encoders

Resolution 1...65.536 pulses

FNC 58S 81 Series

Direct replacement to 1XP8001-1 and 1XP8001-2

Features

- **Industry 58 mm standart size, servo flange**
- **Robust mechanical and electrical construction**
- **Protection to IP67**
- **Up to 65.536 PPR max.**
- **<300 kHz frequency**
- **Special shaft design**

PPR Options :

1 to 128 - 25 - 50 - 100 - 200 - 250 - 300 - 360 - 400 - 500 - 512 - 600 - 720 - 800 - 900 - 1000 - 1024 - 1250 - 1440 - 2000 - 2048 - 2500 - 3000 - 3600 - 4000 - 4096 - 5000 - 6000 - 8192 - 10000 - 12500 - 16384 - 20000 - 25000

Technical data - electrical ratings

Voltage supply	4.75VDC to 30VDC 4.75VDC to 5.5VDC
Protection:	Output short circuit protection. Reverse polarity protection (except 5V version)
Consumption w/o load	≤60 mA (24 VDC)
Resolution (steps/turn)	1...25.000
Reference signal	Zero pulse, width 90° 180°, 360° optional
Optoelectronic life time	100.000 (min)
Output frequency	>200 kHz
Output signals	90° shifted A and B, Z + inverted
Output circuit	Linedriver/RS422 Push-pull short-circuit proof
Interference immunity	DIN EN 61000-6-2
Emitted interference	DIN EN 61000-6-4
Approval	CE

Technical data - mechanical design

Dimensions (flange)	ø58 mm
Shaft loading	≤120 N axial ≤200 N radial
Protection DIN EN 60529	IP 67
Operating speed	≤10000 rpm
Starting torque	≤0.025 Nm (IP 67)
Materials	Housing: Aluminium Flange: Aluminium Shaft : Stainless steel
Shaft diameter:	6, 8, 10, 12 mm (other diameters on request)
Bearings lifetime:	$2x10^9$ rev. at 100% of full rated shaft load (minimum)
Operating temperature	-20...+85 °C
Storage temperature	-30 °C up to +90 °C
Weight approx.	200 g

Accessories

Connectors and cables
CRM1204 M12 4 poles female connector or see page 160

Mounting coupling
SK240606 plastic or see page 158

Mounting accessories
YY RST Spring or see page 156-157

FNC 58S 81 Series

Mechanical Dimensions

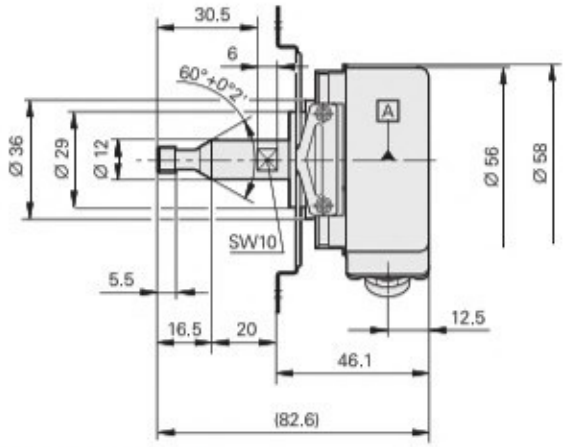

Pulse Diagram

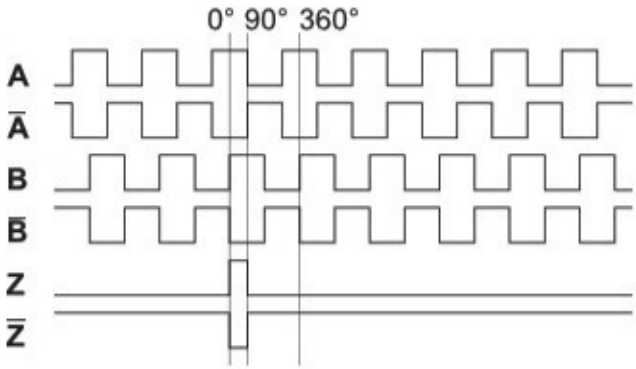

Connector Wiring

A	B	C	D	E	F	G	H	Schirm *Shield* Blindage *Blindaje* Schermo *Skärm*	K	L	M
$\overline{B}$	Up	Z	$\overline{Z}$	A	$\overline{A}$	$\overline{U_{aS}}$	B		0 V	0 V	Up

Encoder Part Number

FNC 58S81-1 / Up = 10 ... 30V

FNC 58S81-2 / Up = 5V ± 10%

Absolute encoders

Absolute Parallel + İncremental

Special Design for textile industry
Special design for Smit Sulzer machines

FNC 58B PAR

Features

- **Industry 58 mm standart size, clamping flange**
- **Robust mechanical and electrical construction**
- **Protection to IP67**
- **<1 MHz frequency**
- **Up to 10 bit parallel output**
- **Up to 65.536 PPR incremental output**
- **Optional strobe output for parallel output**
- **Optional direction change input**

PPR Options :

1 to 65.536

Technical data - electrical ratings

Voltage supply	5VDC to 30VDC
Protection:	Output short circuit protection. Reverse polarity protection (except 5V version)
Consumption w/o load	≤150 mA (24 VDC)
Resolution (steps/turn)	1...65.536
Reference signal	Zero pulse, width 90° 180°, 360° optional
Optoelectronic life time	100.000 (min)
Output frequency	<1 MHz
Output signals	90° shifted A and B, Z + inverted
Output circuit	Linedriver/RS422 Push-pull short-circuit proof
Interference immunity	DIN EN 61000-6-2
Emitted interference	DIN EN 61000-6-4
Approval	CE

Technical data - mechanical design

Dimensions (flange)	Customer specific design
Shaft loading	≤140 N axial ≤240 N radial
Protection DIN EN 60529	IP 67
Operating speed	≤10000 rpm
Starting torque	≤0.025 Nm (IP 67)
Materials	Housing: Aluminium Flange: Aluminium Shaft : Stainless steel
Shaft diameter:	6, 8, 10, 12 mm (other diameters on request)
Bearings lifetime:	$2x10^9$ rev. at 100% of full rated shaft load (minimum)
Operating temperature	-20...+85 °C
Storage temperature	-30 °C up to +90 °C
Weight approx.	350 g

Accessories

Connectors and cables
CRM1204 M12 4 poles female connector or see page 160

Mounting coupling
SK240606 plastic or see page 158

Mounting accessories
YY RST Spring or see page 156-157

FNC 58B PAR

Mechanical Dimensions

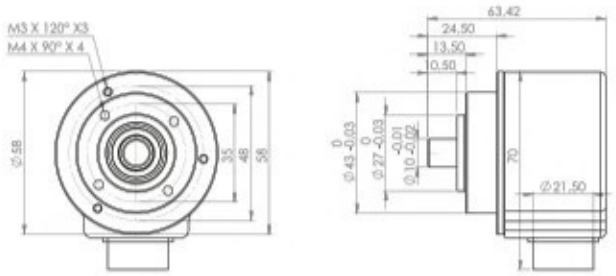

Pulse Diagram

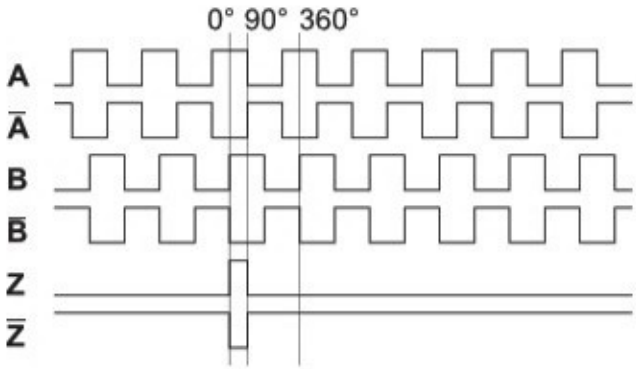

Connector Wiring

Connector Type	+Vcc	GND	A	A'	B	B'	Z	Z'	Shield
CRM1204	1	2	3		4				o.r.
CRM1205	1	2	3		4		5		o.r.
CRM1208	1	2	3	6	4	7	5	8	o.r.
CRM1212	1	2	3	6	4	7	5	8	o.r.
CRM1607	1	2	3		4		5		o.r.
CRM1614	Customer Specific								o.r.
CRM2312R	2-12	10-11	5	6	8	1	3	4	o.r.
CRM2312L	2-12	10-11	5	6	8	1	3	4	o.r.

For further information please see page 64

Cable Wiring

Function	Color	Renk	Explanation
+VB	Brown	Kahve	Supply Voltage
GND	White	Beyaz	Ground
A	Green	Yeşil	A Channel
A'	Red	Kırmızı	A Inverted Channel
B	Yellow	Sarı	B Channel
B'	Pink	Pembe	B Inverted Channel
Z	Gray	Gri	Z Channel
Z'	Blue	Mavi	Z Inverted Channel
Shield	Black	Siyah	Shield

Encoder Part Number

FNC 58B - PAR

FNC 58E 100 BHF Series

Special Design for textile industry
Special Design for Reiter machines

Features

- **Industry 58 mm standart size, end hollow shaft**
- **Robust mechanical and electrical construction**
- **Protection to IP67**
- **100 or 200 PPR options**
- **<300 kHz frequency**

PPR Options :

100 PPR
200 PPR

Technical data - electrical ratings

Voltage supply	4.75VDC to 30VDC 4.75VDC to 5.5VDC
Protection:	Output short circuit protection. Reverse polarity protection (except 5V version)
Consumption w/o load	≤60 mA (24 VDC)
Resolution (steps/turn)	1...25.000
Reference signal	Zero pulse, width 90° 180°, 360° optional
Optoelectronic life time	100.000 (min)
Output frequency	>200 kHz
Output signals	90° shifted A and B, Z + inverted
Output circuit	Linedriver/RS422 Push-pull short-circuit proof
Interference immunity	DIN EN 61000-6-2
Emitted interference	DIN EN 61000-6-4
Approval	CE

Technical data - mechanical design

Dimensions (flange)	ø58 mm
Shaft loading	≤140 N axial ≤240 N radial
Protection DIN EN 60529	IP 67
Operating speed	≤10000 rpm
Starting torque	≤0.025 Nm (IP 67)
Materials	Housing: Aluminium Flange: Aluminium Shaft : Stainless steel
Shaft diameter:	6, 8, 10, 12, 14, 15, 16 mm (other diameters on request)
Bearings lifetime:	$2x10^9$ rev. at 100% of full rated shaft load (minimum)
Operating temperature	-20...+85 °C
Storage temperature	-30 °C up to +90 °C
Weight approx.	250 g

Accessories

Connectors and cables
CRM1204 M12 4 poles female connector or see page 160

Mounting coupling
SK240606 plastic or see page 158

Mounting accessories
YY RST Spring or see page 156-157

FNC 58E 100 BHF Series

Mechanical Dimensions

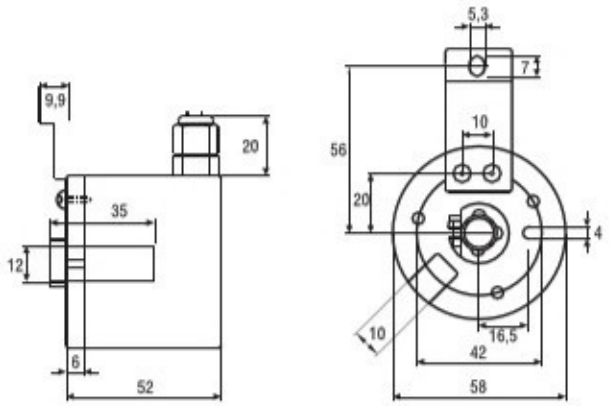

Pulse Diagram

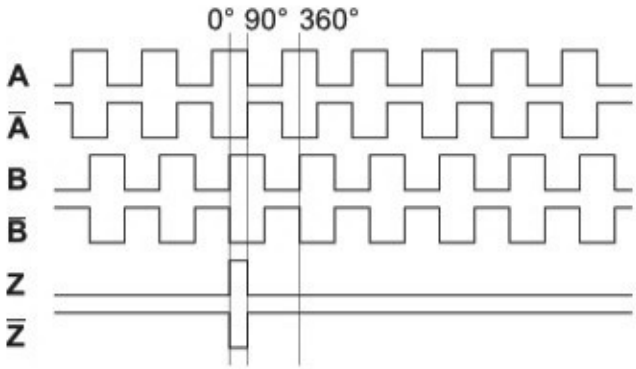

Encoder Part Number

Option 1

FNC	58	E	100	BHF

Option 2

FNC	58	E	200	BHF

FNC TR Series

Special Design for textile industry
Special Design for Reiter machines

Features

- Industry 58 mm standart size, end hollow shaft
- Robust mechanical and electrical construction
- Protection to IP67
- 100 or 200 PPR options
- <300 kHz frequency

PPR Options :

1024 PPR, 2048 PPR, 4096 PPR

Technical data - electrical ratings

Voltage supply	4.75VDC to 30VDC 4.75VDC to 5.5VDC
Protection:	Output short circuit protection. Reverse polarity protection (except 5V version)
Consumption w/o load	≤60 mA (24 VDC)
Resolution (steps/turn)	1...25.000
Reference signal	Zero pulse, width 90° 180°, 360° optional
Optoelectronic life time	100.000 (min)
Output frequency	>200 kHz
Output signals	90° shifted A and B, Z + inverted
Output circuit	Linedriver/RS422 Push-pull short-circuit proof
Interference immunity	DIN EN 61000-6-2
Emitted interference	DIN EN 61000-6-4
Approval	CE

Technical data - mechanical design

Dimensions (flange)	ø58 mm
Shaft loading	≤140 N axial ≤240 N radial
Protection DIN EN 60529	IP 67
Operating speed	≤10000 rpm
Starting torque	≤0.025 Nm (IP 67)
Materials	Housing: Aluminium Flange: Aluminium Shaft : Stainless steel
Shaft diameter:	6, 8, 10, 12, 14, 15, 16 mm (other diameters on request)
Bearings lifetime:	$2x10^9$ rev. at 100% of full rated shaft load (minimum)
Operating temperature	-20...+85 °C
Storage temperature	-30 °C up to +90 °C
Weight approx.	370 g

Accessories

Connectors and cables
CRM1204 M12 4 poles female connector or see page 160

Mounting coupling
SK240606 plastic or see page 158

Mounting accessories
YY RST Spring or see page 156-157

FNC TR Series

Mechanical Dimensions

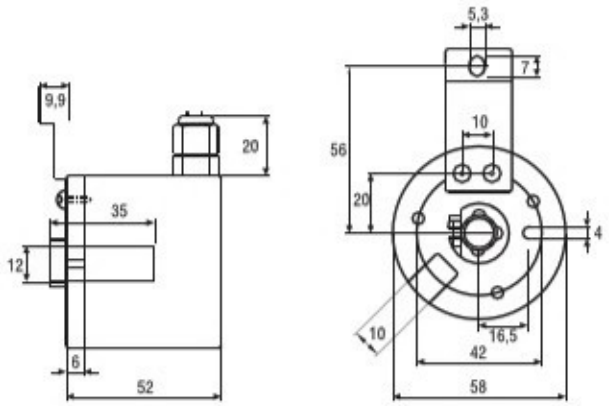

Pulse Diagram

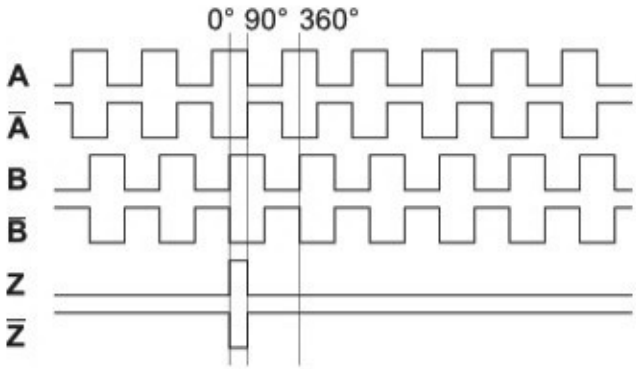

Encoder Part Number

Option 1

FNC	TR245V	1024

Option 2

FNC	TR245V	2048

Option 3

FNC	TR245V	4096

FENAC
Automation Control

Rotary Potantiometers

- Simple
- Accurate
- Trusty

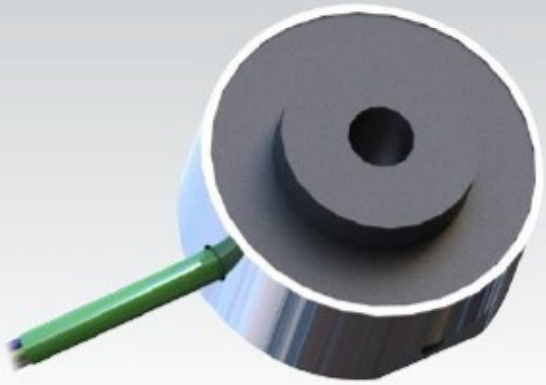

Motion Control Products

FNC FRPS 30 Series

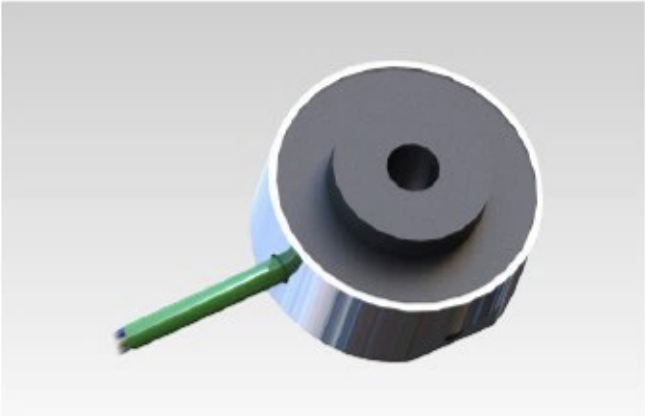

Features

- Hollow shaft
- Better then 0.1 ° resolution
- Linearity up to ±0.25 %
- Long lifetime
- Robust

Technical data - electrical ratings

Total Resistance	5 or 10 kΩ
Interface	Analog output
Resistance tolerance	±%20
Linearity	up to ±0.25%
Electrical travel range	45, 150, 350

Technical data - mechanical design

Dimensions	Ø31mm Thickness: 18 mm
Materials	Housing : Aluminium Shaft :Aluminium
Shaft diameter:	6 mm

Output Funct ions

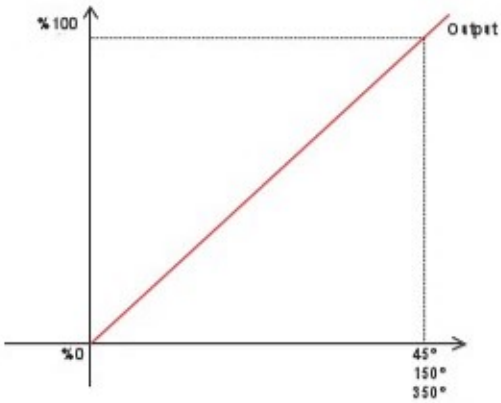

Cable Wiring / Connector

Function	Color	Renk
+VB	Red	Kırmızı
GND	Black	Siyah
Out	Yellow	Sarı

Part Number

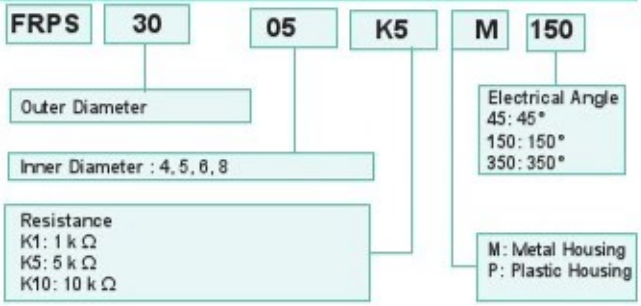

Mechanical Dimensions

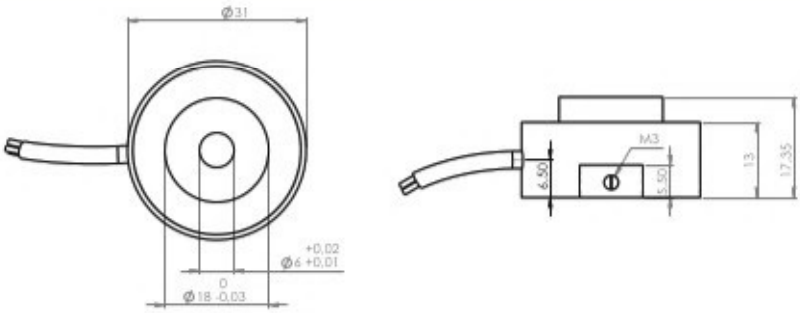

FNC FRPK Series

Features

- Hollow shaft
- Better then 0.1 ° resolution
- Linearity up to ±0.25 %
- Long lifetime
- Robust
- With 2 mounting holes at diameter D: 38 mm

Technical data - electrical ratings

Total Resistance	5 or 10 kΩ
Interface	Analog output
Resistance tolerance	±%20
Linearity	up to ±0.25%
Electrical travel range	45, 150, 350

Technical data - mechanical design

Dimensions	Ø31mm Thickness: 18 mm
Materials	Housing : Aluminium Shaft :Aluminium
Shaft diameter:	6 mm

Output Functions

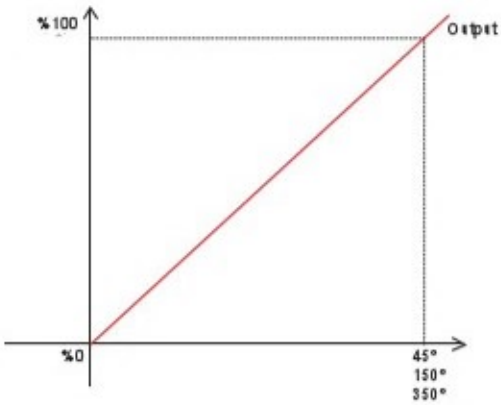

Cable Wiring / Connector

Function	Color	Renk
+VB	Red	Kırmızı
GND	Black	Siyah
Out	Yellow	Sarı

Part Number

FRPK | 30 | 05 | K5 | P | 150

- 30: Outer Diameter
- 05: Inner Diameter : 4, 5, 6, 8
- K5: Resistance
  - K1: 1 k Ω
  - K5: 5 k Ω
  - K10: 10 k Ω
- P: M: Metal Housing; P: Plastic Housing
- 150: Electrical Angle
  - 45: 45°
  - 150: 150°
  - 350: 350°

Mechanical Dimensions

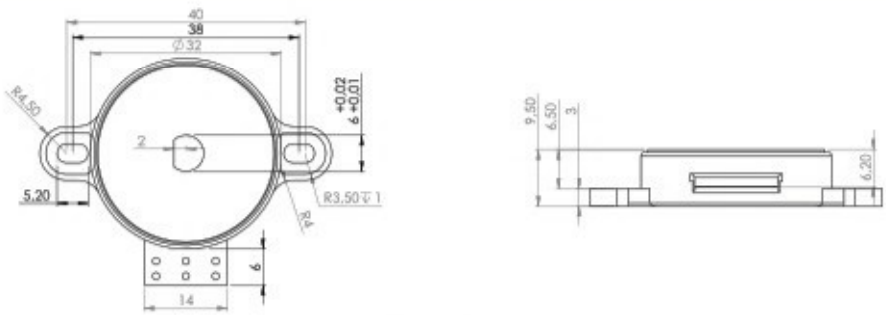

FNC FRPS 20 Series

Features

- **Ratiometric analog output, resistive sensing**
- **Hollow shaft**
- **±%1 linearity**
- **Customer spesific design**
- **Excellent repeatability**
- **Robust Construct on**
- **Operating temprature -45 °C ~100 °C**

Technical data - electrical ratings

Total Resistance	1 kΩ
Interface	Ratiometric analog output
Resistance tolerance	±%20
Linearity	≤ ±%1
Electrical travel range	330°

Technical data - mechanical design

Dimensions	Ø19.25 mm Thickness: 4.8 mm
Materials	Housing : Aluminium Shaft :Aluminium
Shaft diameter:	4 mm

Output Functions

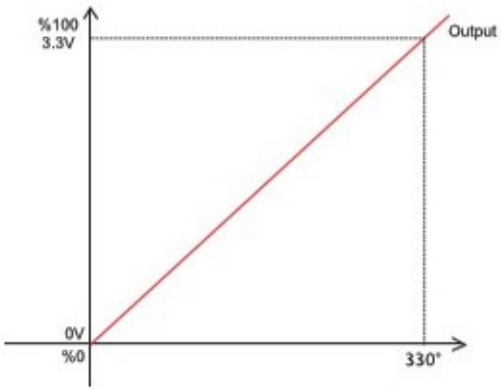

Cable Wiring / Connector

Function	Color	Renk
+VB	Red	Kırmızı
GND	Black	Siyah
Out	Yellow	Sarı

Part Number

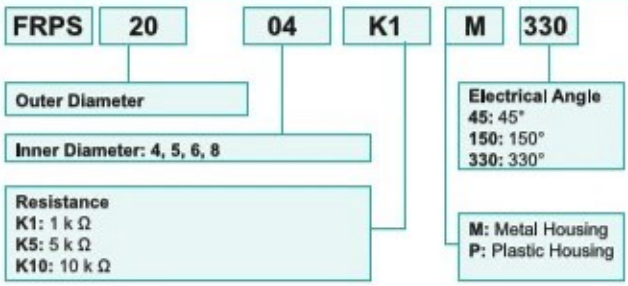

Mechanical Dimensions

Please contact with us.

FENAC Automation Control

Hand encoders

- **Manuel**
- **Easy**

Motion Control Products

FNC EL and ELT hand encoders

FNC EL 100

Features

- Manuel puls encoder
- 60mm, 80mm diameter housing
- 100PPR option
- Voltage output or LD output
- Operating temperature : -10...+80 °C
- Weight : 250 g
- Normal rotational speed : max 200 r / min
- Current consumption : max 60mA
- Frequency responce : 5kHz

Dimensions

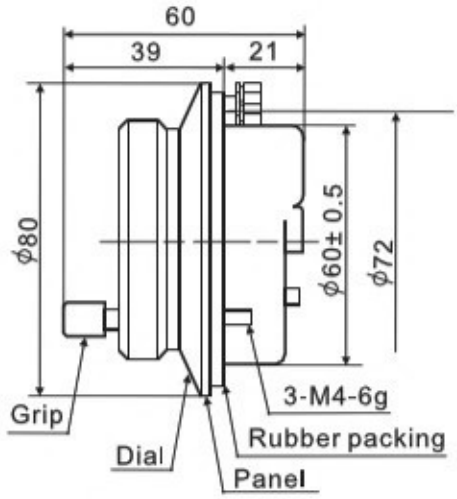

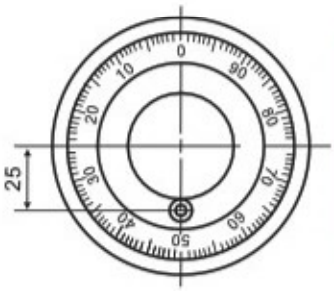

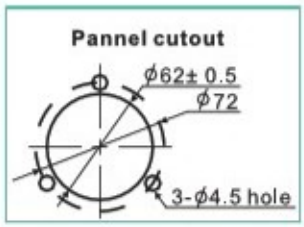

FNC ELT 100

Features

- Hand held manuel puls encoder
  - Axis select switch
  - Rate override switch
  - Reset switch
- 100PPR option
- Voltage output or LD output
- Operating temperature : -10...+80 °C
- Weight : 450 g
- Normal rotational speed : max 200 r / min
- Current consumption : max 60mA
- Frequency responce : 5kHz

Dimensions

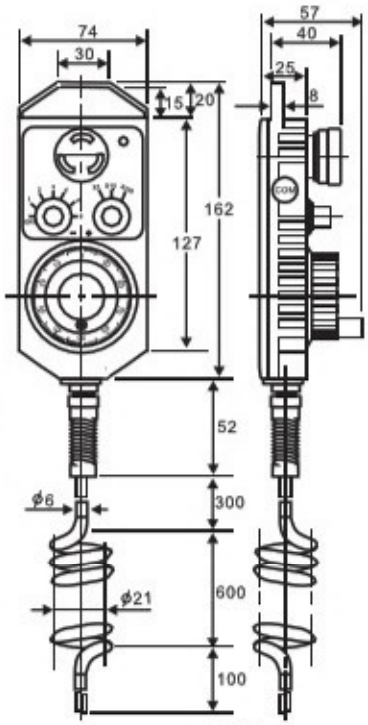

Connection

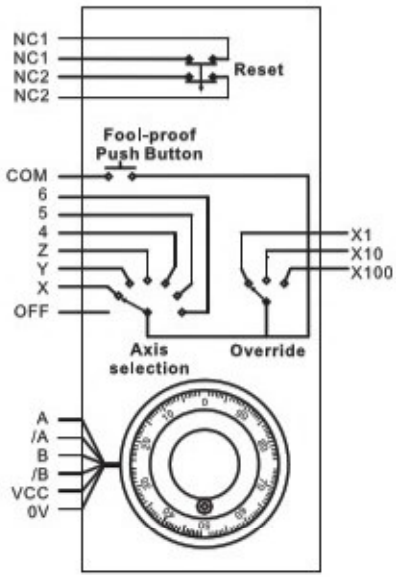

FENAC Automation Control

Accessories

- Comfort
- Flexibility

Motion Control Products

Torque supports

Encoder mounting attachments	Fixing components for hollow shaft encoders

Order Code : YY UV

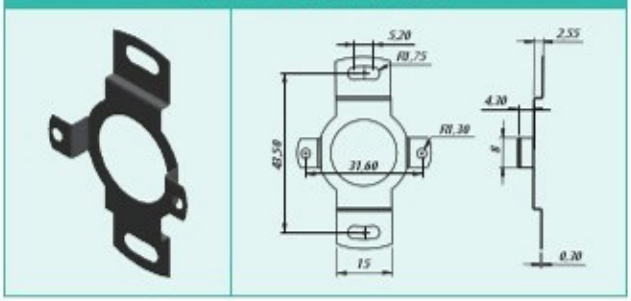

Order Code : YY AKR3

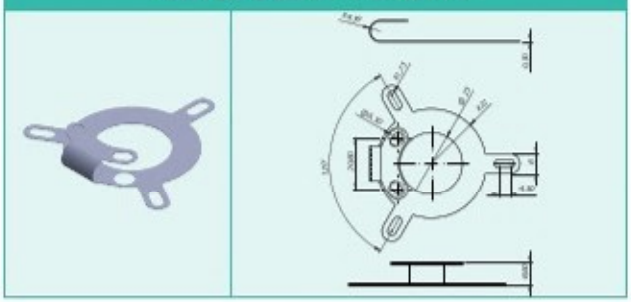

Order Code : YY AKS

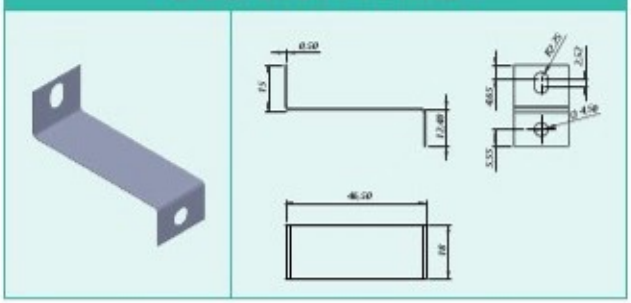

Order Code : YY RST

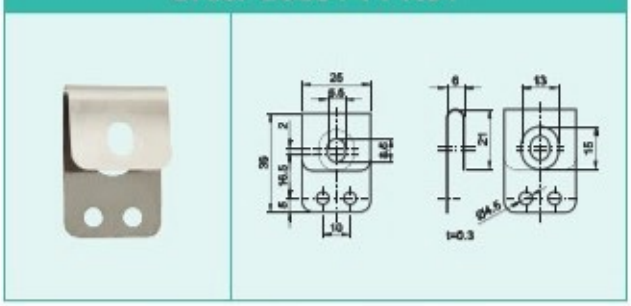

Order Code : YY SCR

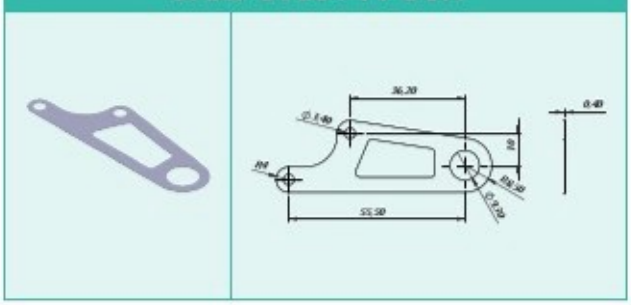

Encoder mounting attachments	Fixing components for hollow shaft encoders

Order Code : YY ASTK

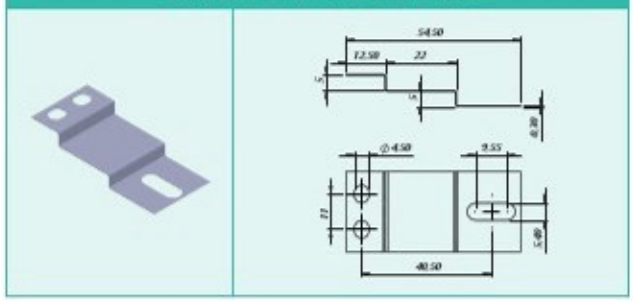

Order Code : YY SS

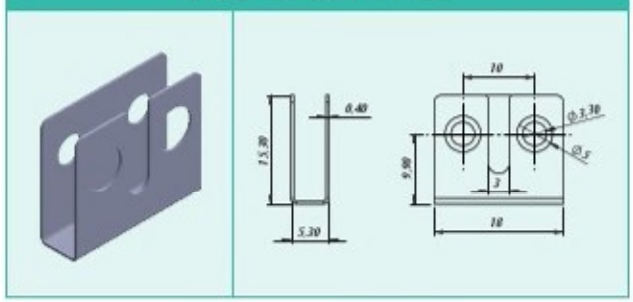

Order Code : YY KKBL

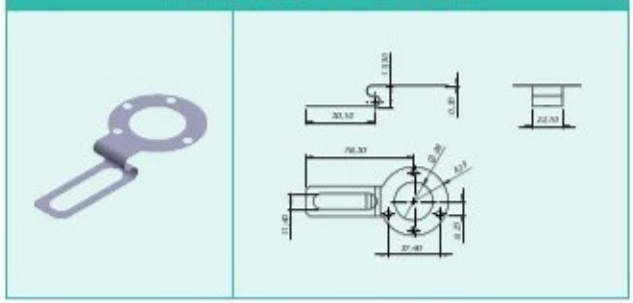

Order Code : YY KLM

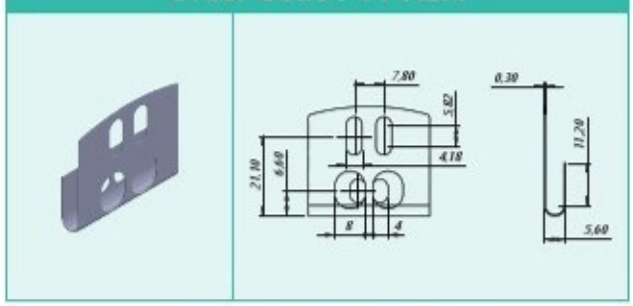

Order Code : YY MNT

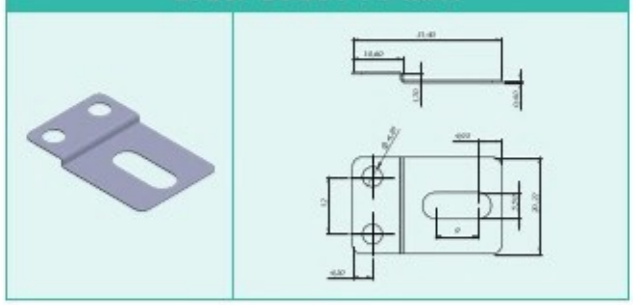

Torque supports

Encoder mounting attachments	Fixing components for hollow shaft encoders

Order Code : YY NGL20

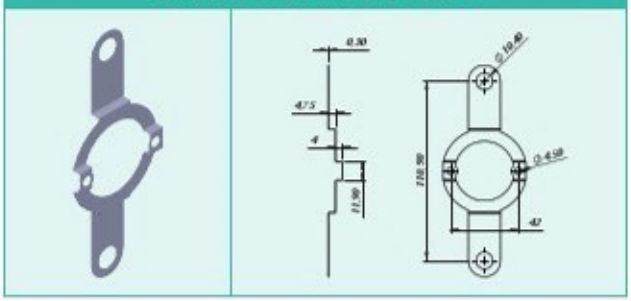

Order Code : YY NGL

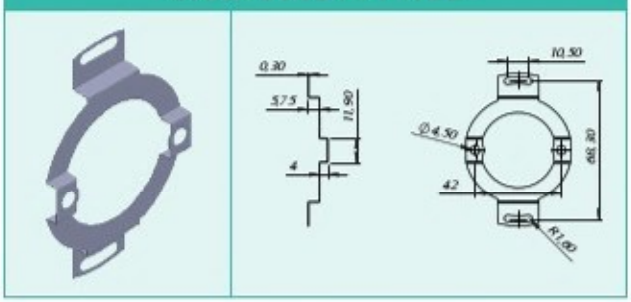

Order Code : YY SCRH

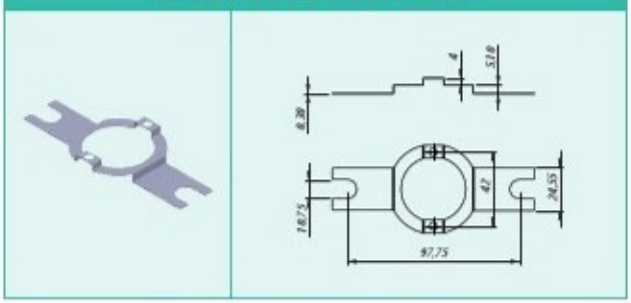

Order Code : YY SC38

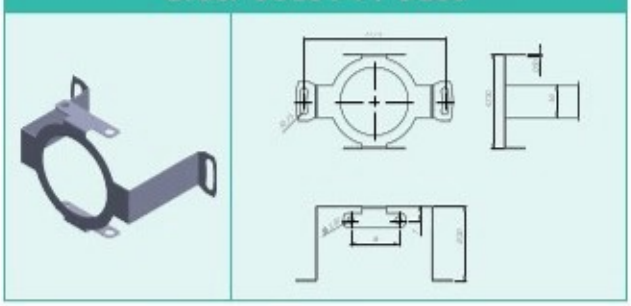

Order Code : YY SC34

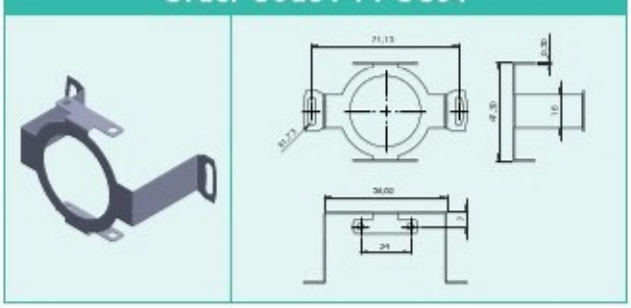

Encoder mounting attachments	Fixing components for hollow shaft encoders

Order Code : YY SC42

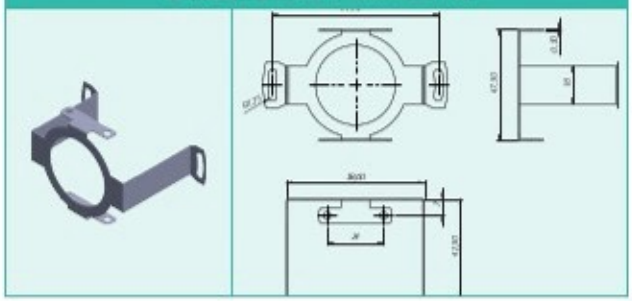

Order Code : YY SC8

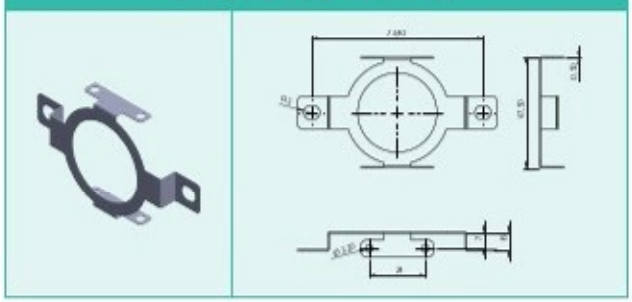

Order Code : YY DB

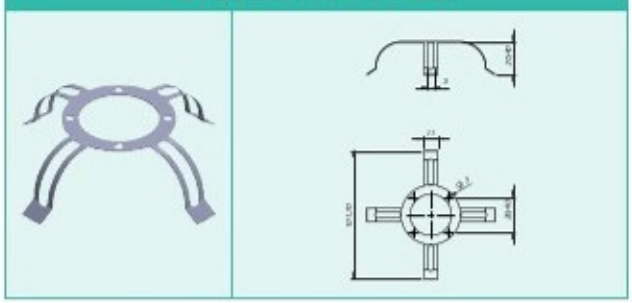

Order Code : YY SCBLZ

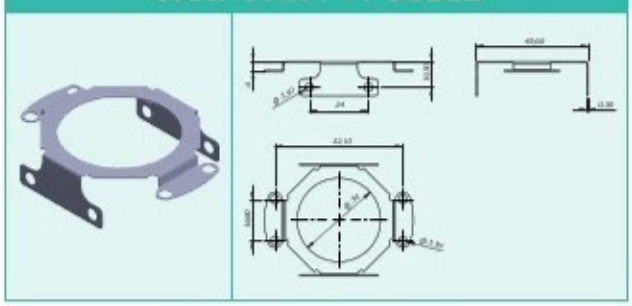

Order Code : YY TEO

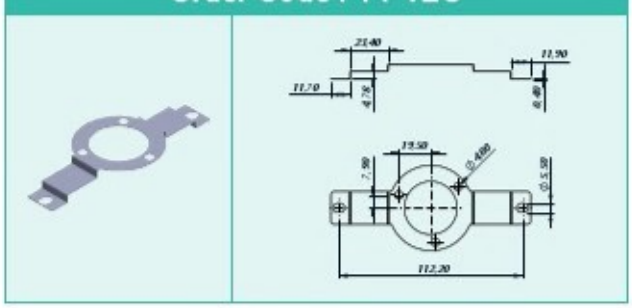

Coupling view	Drawing	Order Code	

METAL COUPLINGS

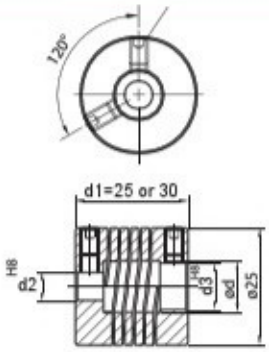

d2= 6, d3= 6	**MK250606**
d2= 6, d3= 8	**MK250608**
d2= 6, d3=10	**MK250610**
d2= 8, d3= 8	**MK250808**
d2=10, d3=10	**MK301010**
d2=11, d3=11	**MK301111**
d2=12, d3=12	**MK301212**
d2=10, d3=12	**MK301012**

PAGUFLEX COUPLINGS

PF26

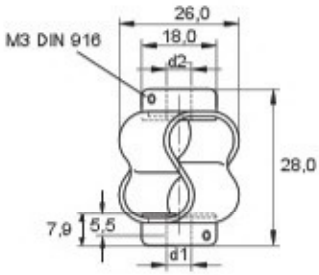

PF48

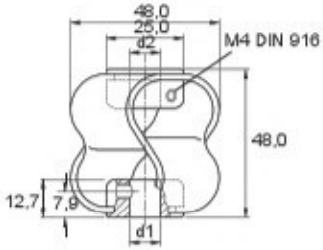

PF26, d1= 6, d2= 6	**PF260606**
PF26, d1= 8, d2= 8	**PF260808**
PF48, d1= 10, d2= 10	**PF481010**
PF48, d1= 10, d2= 12	**PF481012**

SPRING FLEX COUPLINGS

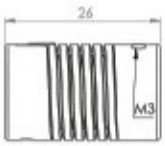

L= 35 d1= 6, d2= 6	**SPF350606**
L= 35 d1= 8, d2= 8	**SPF350808**
L= 50 d1= 10, d2= 10	**SPF501010**

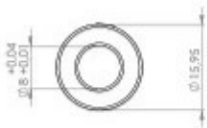

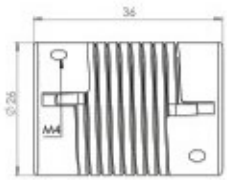

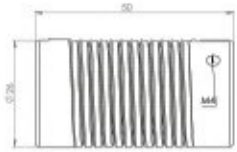

Coupling view	Drawing	Order Code

ROTEX COUPLINGS

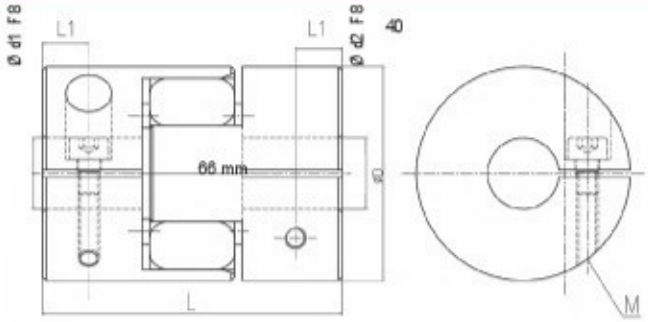

RTX66 d1= 14, d2= 14	**RTX661414**
RTX66 d1= 16, d2= 16	**RTX661616**
RTX66 d1= 18, d2= 18	**RTX661818**

PLASTIC COUPLINGS

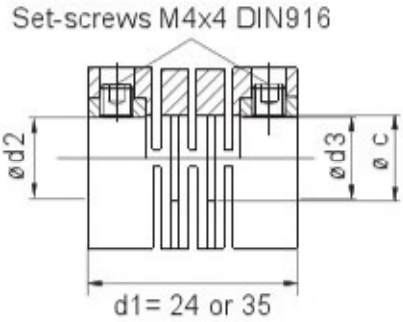

d2= 6, d3= 6	**SK240606**
d2= 8, d3= 8	**SK240808**
d2=10, d3=10	**SK351010**

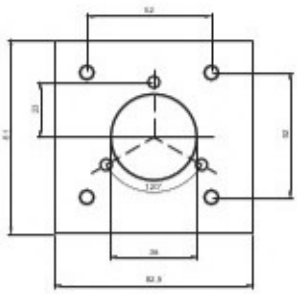

SF58B
Square flange

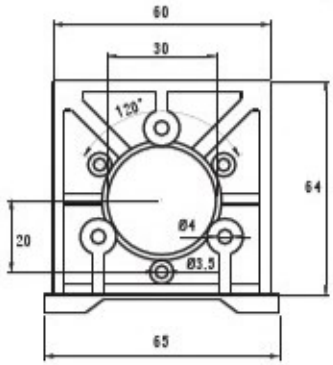

SF50B
Square flange

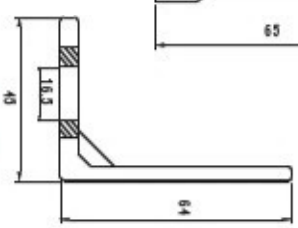

Accessories
M12,16, 23 Female Sensor Connectors

Ready-made shielded female cable connector for M12 sensor connectors

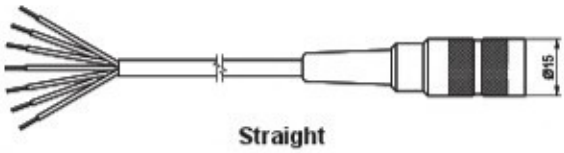

Straight

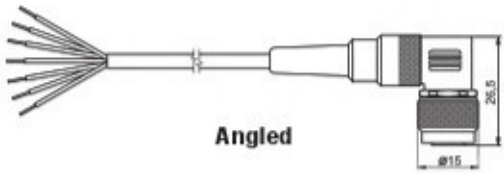

Angled

Suitable for connector:	CRM 1204/CAM 1204	CRM 1205/CAM 1205	CRM 1208/CAM 1208	CRM 1212/CAM 1212
Assignment:	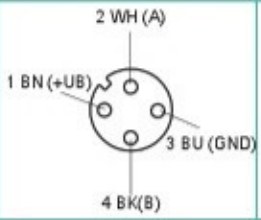	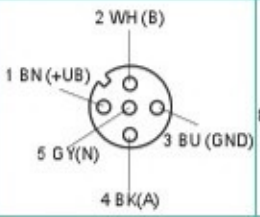	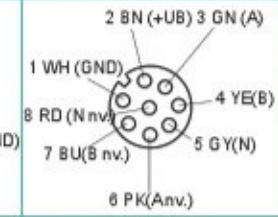	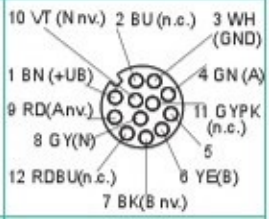
No.of contacts:	4-pn	5-pn	8-pn	12-pn
Finish of contact:	metal, CuZn, gold			
Protection rating:	IP67			
Order Code Straight	FCSF M1204E...	FCSF M1205E...	FCSF M1208E...	FCSF M1212E...
Order Code Angled	FCAF M1204E...	FCAF M1205E...	FCAF M1208E...	FCAF M1212E...

* For cable lenght please fill the gap in centimeters, for instance for 5 meters fill as 500.

Ready-made shielded female cable connector for M16, M23 connectors

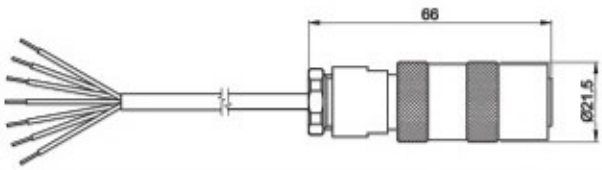

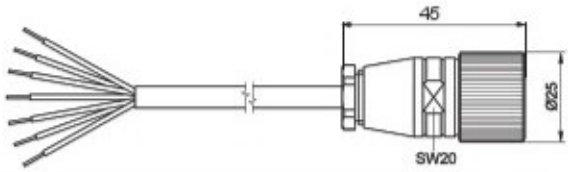

Suitable for connector:	CRM 1607/CAM 1607	CRM 1614/CAM 1614	CRM 2312L/CAM 2312L	CRM 2312R/CAM 2312R
Assignment:				
No.of contacts:	7-pn	14-pn	12-pn	12-pn
Finish of contact:	metal, CuZn, gold			
Protection rating:	IP67			
Order Code Straight	FCSF M1607E...	FCSF M1614E...	FCSF M2312RE...	FCSF M2312LE...
Order Code Angled	FCAF M1607E...	FCAF M1614E...	FCAF M2312RE...	FCAF M2312LE...

* For cable lenght please fill the gap in centimeters, for instance for 5 meters fill as 500.

FENAC Automation Control

Tecnical

- Optics
- Electronics
- Mechanics

Motion Control Products

Optical Principle

FENAC Optical Incremental Encoders are based on non-contact optical scanning. A paralel IR light beam is produced from a collimated light source which is formed by an IR Led and a collimator lens. The light is passing from a mask and a code disc to reach an optical detector. When the disc rotates, optically dark and light regions appear on optical detector's active areas. So rotation is transformed to an electrical information which is based whether light is passing from a code disc or interrupted by a code disc. So two signals that has a 90° phase shift is produced as well as a zero reference signal. Optical detector is a photo-diode array, working differentially to eliminate common mode noise effects. Then highprecision signals are amplified for industrial use. Outputs are either Push-Pull or Line Driver square waves and their inverter signals.

FENAC Incremental Encoders consists of precision optical assembly, robust mechanics and high-performance electronics to achieve low noise precision output signals.

Phase Error

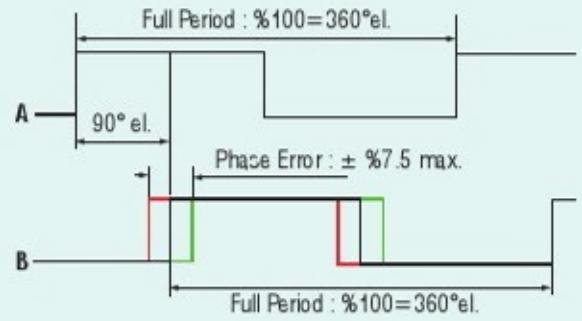

Magnetic Principle

FENAC Magnetic Incremental encoders are based on non-contact magnetic scanning principle. A diametrical magnetised magnet is mounted in stainless steel shaft. As the encoder rotates, changing magnetic field is sensed by an Hall-Effect IC and and voltages that are induced by magnetic field are converted to 90° phase shifted square waves. Then high-precision signals are amplified for industrial use. Outputs are either Push-Pull or Line Driver square waves and their inverter signals.

Pulse Width Error

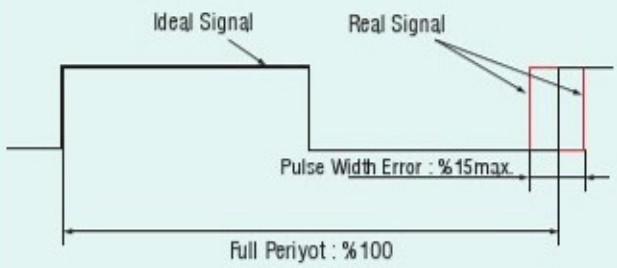

Optics

- Light Source: IR-LED
- Optoelectronis life: 100.000 hours
- Scanning: differential

Logic Pulse Width Error

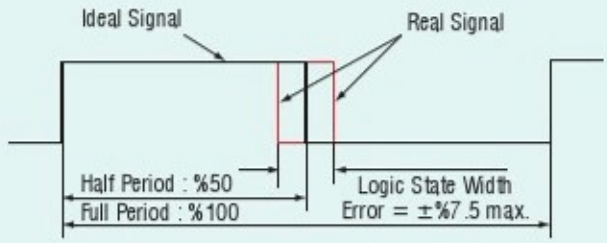

Error Components

Error components of rotary encoders are described in three sections which are phase error, pulse width error and logic pulse width error. Maximum errors are illustrated as follows.

Mechanical Parts

All FENAC encoders consists of a high precision mechanics including two shaft bearings. Bearings are capable of withstanding high speed and load and featuring long-term load capacity. The lifetime of bearing is 10^9 revolutions which is a minimum value, actual value may be higher surely. Lifetime in hours can be evaluated by following Formula

$$\text{Lifetime (hours)} = \frac{\text{Number of resolution}}{\text{RPM} * 60}$$

Maximum Operating Speed

The maximum operaing speed is limited by number of pulses per revolution, maximum output frequency of electrical circuit and maximum mechanical operating speed. The maximum speed can be expressed as follows.

$$\text{Max. operating speed} = \frac{\text{Max. output frequency of encoder in Hz.} * 60}{\text{PPR of encoder}}$$

Double bearing lock system

Fenac encoders designed according to double bearing lock system which ensures high radial and axial shaft loadings. Maximum distance and quality bearings increase the strenght of the mechanical parts. In this way encoder becomes more robust against vibration and installation errors.

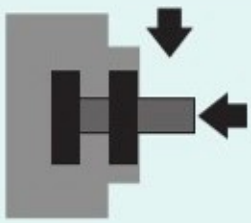

Protection from Noise Interference

For proper operation to get rid of noise effects, we recommend the following measures.

• It is recommended to wire the shield of encoder cable to earth potential. The entire system must be grounded at one signal location to avoid ground loops.

• The connecting cables should be shielded and should be kept away from power lines and other noise generating equipments.

• Sources of interference such as motors, solenoid valves, frequency converters etc should always have their noise suppressed at

• Encoders should not be powered from the same mains supply as solenoid valves or contactors, as this may cause interference.

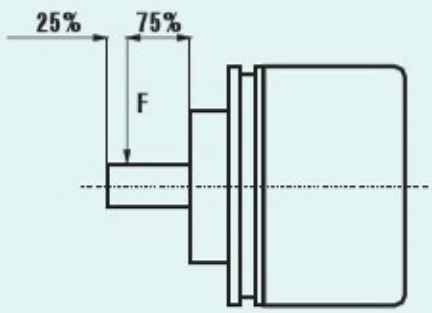

Technical definitions

Absolute encoders provide current position for output by digital serial or parallel data interface without need of reference signal. Actual position of encoder is stored by the encoder by the help of gear or battery solution.

Optical absolute encoders identify a code on a glass disc. High performance Opto ASICs with integrated monitoring and diagnostic verifies every position value in realtime. Adaptation of signals than obtained multi-layer electronics circuits.

Magnetic abosulte encoders provide exact position value without need of glass disc and using magnetic ASICs which make them more robust to shock and vibrations.

Code types

Absolute position information is sent to receiver electronics by means of binary or gray coded data. The gray code is a single step code which ensures that from one position to next only one bit changes while change from one position to next for binary code result to changes more than one bit. This may cause wrong position information. That is why gray coded position information is more preferable.

Binary code

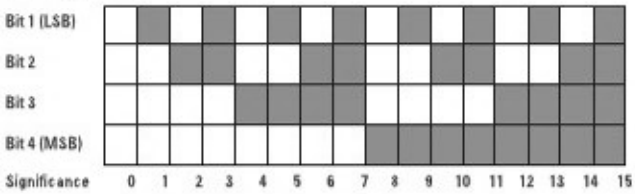

Gray code

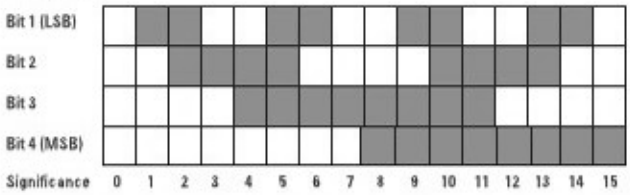

SSI data transmission

Terminal significance

+VB	Encoder voltage supply.
GND	Encoder ground connection relating to UB.
DATA+	Positive, serial data output of differential linedriver.
DATA-	Negative, serial data output of differential linedriver.
CLK+	Positive SSI clock input. Clock + together with clock-forms a current loop.
CLK-	Negative SSI clock input. Clock - together with clock + forms a current loop.
ZERO SET	Input for setting a zero point anywhere within the programmed encoder resolution. The zero setting is standart on Low and triggered by a High impulse over 100 ms duration
DIRECTION	Input for setting counting direction. This input is standart Low and triggered by a High impulse. Direction is counter-clockwise on standart, when high impulse applied it becomes clockwise

Pulse Diagram

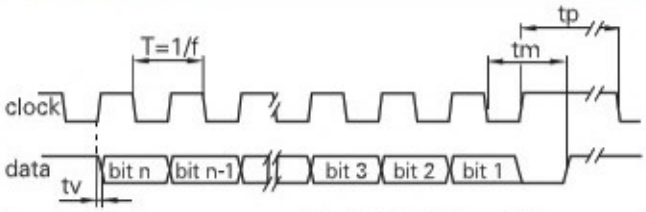

Clock frequency, f	50...2000 kHz for SSI up to 10MHz for BISS
Code	Binary or gray
Status and parity bit	On request
Monoflop time tm	>15µs
Clock time out	Programmable at factory

FENAC WIRE UNITS FAMILY

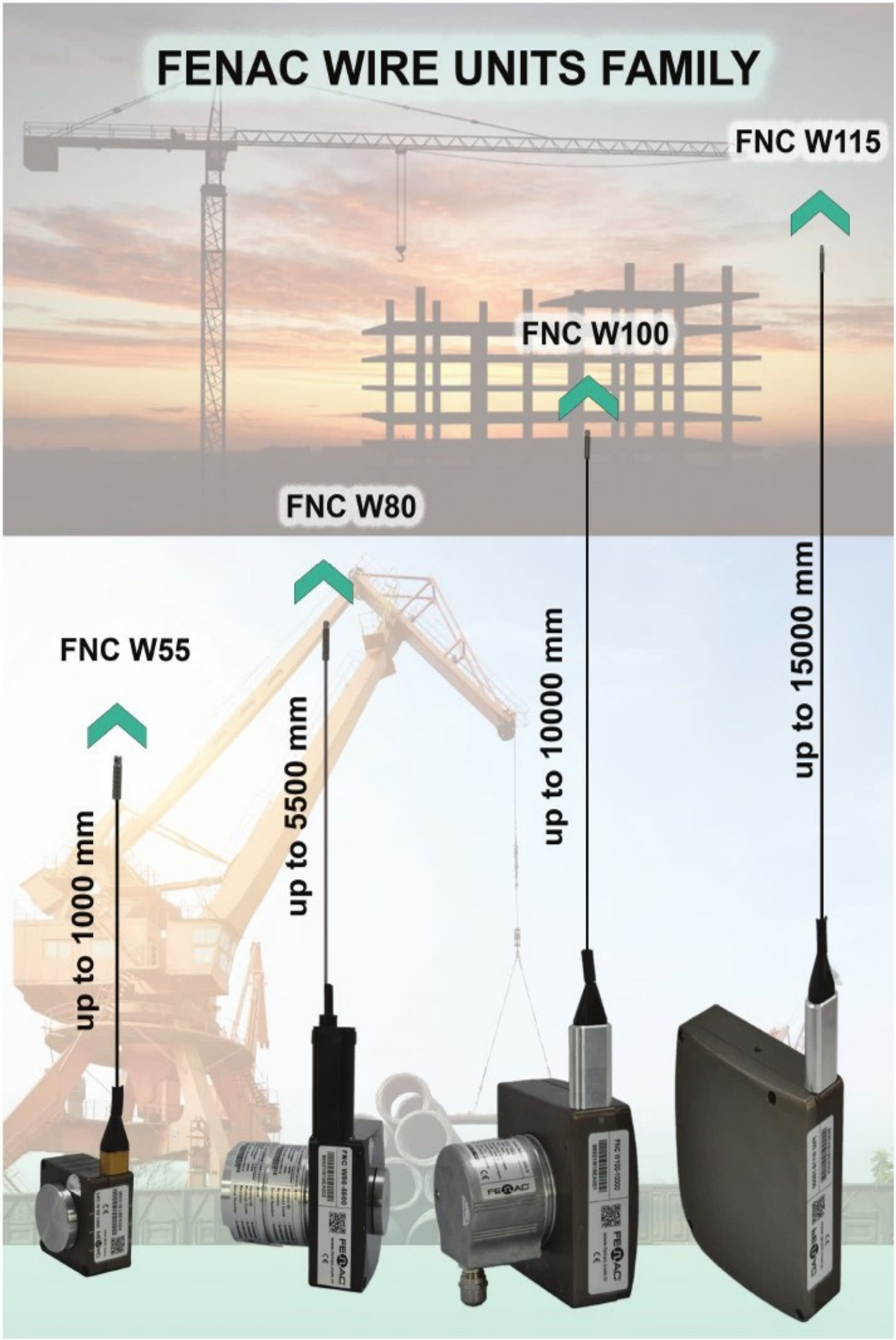

World of quality encoders

Represented by:

FENAC MÜHENDİSLİK SAN. TİC. LTD. ŞTİ.
Çamlık Mah. İkbal Cd. Uğurlu Sk. No.3 Ümraniye - İstanbul - Turkey
Tel/Phone : +90 216 499 11 06 pbx Faks/Fax : +90 216 499 23 32
www.fenac.com.tr
info@fenac.com.tr

ISO9001:2008 Cert No:686577

KOSGEB www.kosgeb.gov.tr
Basım Yeri : Hatem matbaacılık Reklam İnhisaf Sanayi ve Ticaret Ltd. Şti. / 0282 7581699 Çorlu-Tekirdağ / 30.10.2015